VOLINIX

高效 | 品质 | 诚信 | 专业

Efficient Quality Integrity Major

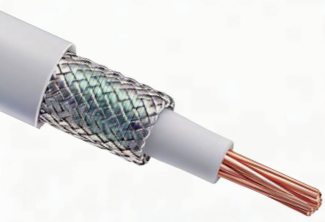

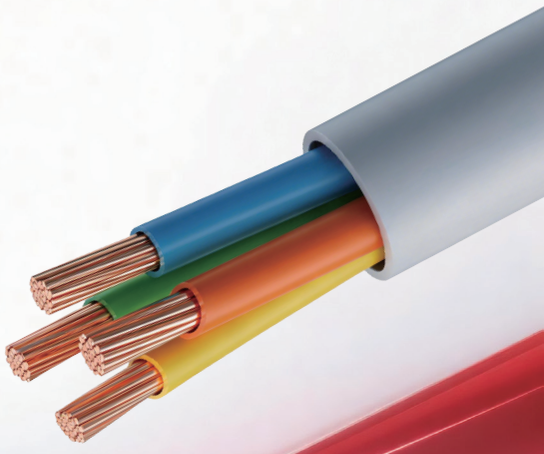

连接能源动脉
赋能智慧未来

POWERING CONNECTIONS

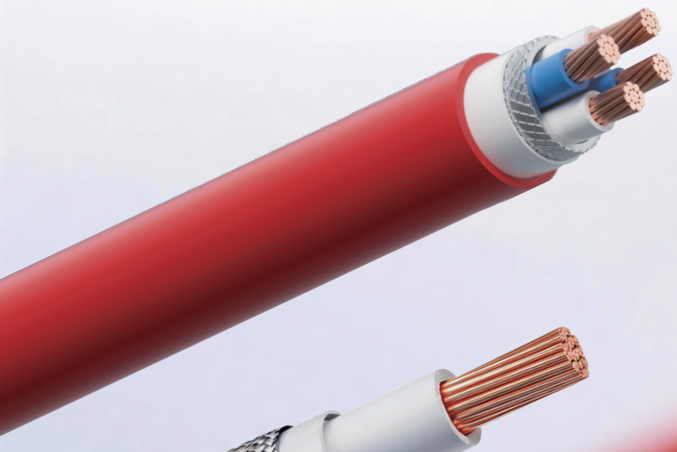

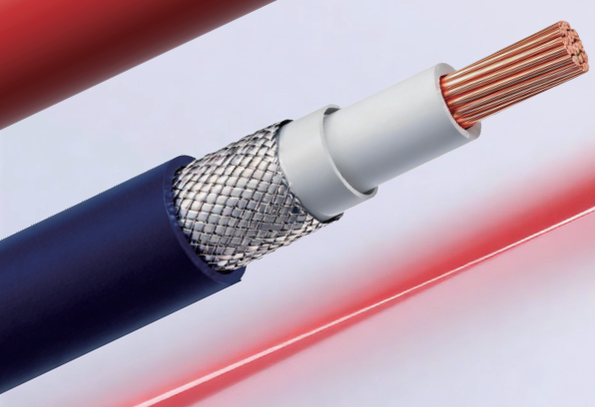

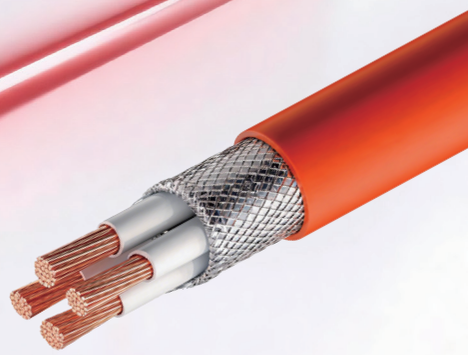

专业电线电缆解决方案

WIRE & CABLE SOLUTIONS

公司简介 / COMPANY PROFILE

日日红电缆 RIRIHONG CABLE　VOLINIX

福建日日红电线电缆有限公司是一家专注于全球能源转型的高新技术企业，深耕电力线缆领域，集研发创新、定制化生产、系统集成、全球交付与全生命周期工程服务于一体，致力于为电力输配、新能源、基础设施及工业应用等领域提供一体化电力系统解决方案。公司旗下拥有日日红与VOLINIX沃联仕两大自主品牌，凭借稳定可靠的产品品质、坚实的技术实力和完善的国内外服务网络，赢得国内工程客户与全球EPC承包商、新能源企业及国际贸易合作伙伴的广泛信赖。

Fujian Ririhong Wire & Cable Co., Ltd. is a high-tech enterprise dedicated to the global energy transition. With deep expertise in the power cable industry, the company integrates R&D innovation, customized manufacturing, system integration, global delivery, and full-lifecycle engineering services to provide integrated power system solutions for power transmission and distribution, renewable energy, infrastructure, and industrial applications. The company owns two proprietary brands, "Ririhong" and "VOLINIX", and has earned widespread trust from domestic engineering clients, global EPC contractors, renewable energy enterprises, and international trade partners through reliable product quality, solid technical capabilities, and a comprehensive domestic and international service network.

专注于全球能源转型的高新技术企业

AHIGH-TECH ENTERPRISE FOCUSED ON GLOBAL ENERGY TRANSFORMATION



核心能力 / CORECA PABILITIES

研发创新
R&D Innovation

精密制造
Precision Manufacturing

系统集成
System Integration

全球交付
Global Delivery

智能制造基地 / INTELLIGENT MANUFACTURINGBASE



公司拥有占地35,000平方米的现代化智能制造基地，建立了高度自动化、精细化、标准化的生产体系。厂区配置三层共挤悬链式交联生产线、高速铜铝大拉机、管式/框式绞线机、串联绝缘挤出生产线、高速护套挤出生产线、盘式成缆机、钢带铠装机，以及高端矿物绝缘电缆氩弧焊扎纹一体化生产设备等一系列国际先进装备，覆盖导体拉制、绞合、绝缘挤出、成缆、铠装、金属护套焊接扎纹、护套包覆等全部生产工序，实现规模化与精密化生产，可同时满足国内大批量供货与海外出口订单的柔性制造需求。

The company operates a modern intelligent manufacturing base spanning 35,000 square meters, with a highly automated, refined, and standardized production system. The facility is equipped with a range of internationally advanced equipment, including triple-layer co-extrusion catenary cross-linking production lines, high-speed copper and aluminum rod breakdown machines, tubular/frame stranding machines, tandem insulation extrusion lines, high-speed sheath extrusion lines, drum-type cabling machines, steel tape armoring machines, and high-end mineral-insulated cable integrated TIG welding and corrugating equipment. Covering the entire production process–from conductor drawing, stranding, insulation extrusion, cabling, and armoring to metal sheath welding and corrugating, and sheath application–the facility enables large-scale and precision manufacturing, flexibly accommodating both domestic bulk supply orders and overseas export orders.

以精密制造，铸线缆精品

With precise manufacturing, producing high-quality cable assemblies



同时设有独立的研发检测中心，配备3D垂直扭曲试验机、单根及成束燃烧试验机、高低温老化试验箱、耐压绝缘测试仪、局部放电检测系统等全套精密检测设备，可独立完成性能测试、阻燃验证、耐候评估、结构校验等全项检测，从源头保障产品品质为产品持续优化升级提供技术支撑。公司已构建从研发创新、工程定制、精密制造到全球项目交付的完整垂直整合能力，可全面满足标准化批量订单与大型项目定制化需求。

The company also operates an independent R&D and testing center, equipped with a comprehensive suite of precision testing instruments including 3D vertical torsion testing machines, single and bunched cable combustion testing machines, high and low temperature aging chambers, voltage withstand and insulation resistance testers, and partial discharge detection systems. The center independently conducts full-range testing including performance verification, flame retardancy validation, weatherability assessment, and structural inspection, ensuring product quality from the source and providing technical support for continuous product optimization and upgrading. The company has built complete vertical integration capabilities spanning R&D innovation, engineering customization, precision manufacturing, and global project delivery, fully meeting the needs of both standardized bulk orders and large-scale customized projects.

产品矩阵 / PRODUCT PORTFOLIO



依托完善的生产与研发体系，公司构建了品类齐全的产品矩阵，全面覆盖110kV及以下各电压等级的电力线缆产品。核心产品包括交联电力电缆、光伏专用电缆、电动汽车充电电缆、新能源汽车高压线缆、铝合金节能电缆、柔性矿物绝缘防火电缆、高端建筑布电线等全系列线缆，同时配套供应电缆桥架、抗震支吊架及全系列电缆附件，实现电力线缆系统的成套供应。

Leveraging its robust production and R&D capabilities, the company offers a comprehensive product portfolio covering power cables across all voltage levels up to 110kV. Core products include XLPE power cables, photovoltaic cables, EV charging cables, high-voltage cables for new energy vehicles, aluminum alloy energy-saving cables, flexible mineral-insulated fire-resistant cables, and high-end building wires, complemented by cable trays, seismic support systems, and a full range of cable accessories, enabling complete supply of power

核心线缆产品 / CORE CABLE PRODUCTS

交联
电力电缆
XLPE Power Cables

新能源汽车
高压线缆
EV High-Voltage Cables

柔性矿物绝缘
防火电缆
R&D Innovation

铝合金
节能电缆
Aluminum Alloy Cables

光伏
专用电缆
Photovoltaic Cables

电动汽车
充电电缆
EV Charging Cables

产品可按中国国家标准（GB）及IEC、BS、UL等国际标准生产，广泛应用于国内外电力输配、光伏与储能、海上风电、轨道交通、市政基建、城市更新、重型工业及高端建筑等关键基础设施领域，能够满足各类严苛工况下的项目建设需求。

Manufactured in accordance with Chinese National Standards (GB) as well as international standards such as IEC, BS, and UL, the products are widely applied in critical infrastructure sectors including power transmission and distribution, solar and energy storage, offshore wind power, rail transit, municipal infrastructure, urban renewal, heavy industry, and high-end buildings, meeting the requirements of projects under various demanding operating conditions.

资质与认证 / QUALIFICATIONS & CERTIFICATIONS

公司以高标准质量管理体系与国际化认证架构保障产品品质，严格遵循中国国家标准（GB）及IEC国际电工委员会技术规范，全面推行ISO 9001质量管理体系、ISO 14001环境管理体系和ISO 45001职业健康安全管理体系，实现生产、管理、环境与安全的全维度标准化管控。

The company ensures product quality through a high-standard quality management system and international certification framework. Strictly complying with Chinese National Standards (GB) and IEC technical specifications, the company has fully implemented ISO 9001 quality management, ISO 14001 environmental management, and ISO 45001 occupational health and safety management systems, achieving comprehensive standardized control across production, management, environment, and safety.

职业健康安全管理体系认证证书
Occupational Health and Safety Management System Certification Certificate



国家电网、南方电网合格供应商资格
Qualification of qualified suppliers for State Grid and Southern Grid



环境管理体系认证证书
Environmental Management System Certification Certificate



环境管理体系认证证书
Environmental Management System Certification Certificate



企业持有全国工业产品生产许可证、CCC中国强制性产品认证等核心准入资质，并具备国家电网、南方电网合格供应商资格；产品先后获得CE欧盟合格认证、RoHS有害物质限制认证、CPR欧盟建筑产品法规认证、TÜV德国莱茵认证、BS英国标准协会认证、UL美国保险商实验室认证、PS菲律宾产品安全认证等多项国际权威认证，全面符合全球主流市场准入要求，为产品出口与海外工程落地提供坚实的资质保障。

The enterprise holds core access qualifications including the National Industrial Product Production License and CCC (China Compulsory Certification), and is qualified as an approved supplier for State Grid and China Southern Power Grid. Its products have obtained numerous international authoritative certifications, including CE (EU Conformity), RoHS (Restriction of Hazardous Substances), CPR (EU Construction Products Regulation), TÜV Rheinland, BS (British Standards Institution), UL (Underwriters Laboratories), and PS (Philippine Product Safety Certification), fully meeting the market access requirements of major global markets and providing solid qualification support for product export and overseas project implementation.

资质与认证 / QUALIFICATIONS & CERTIFICATIONS



PS |菲律宾标准

PS菲律宾标准认证是菲律宾官方强制的产品合规认证。它不仅是一项检测，更是一套涵盖工厂审查与生产一致性评估的严格管理体系。

获得PS认证，是企业打破国际贸易壁垒、塑造海外品牌公信力的必由之路，彰显企业强大的品质管控与履约能力。

CE | 欧盟强制性产品认证

CE标志是线缆产品出口欧盟的强制性“经济护照”。与中国CCC侧重基础绝缘安全不同，欧盟针对建筑用电线实施严格的CPR（建筑产品法规），核心考核电缆火灾时的热释放率、火焰蔓延及燃烧滴落物等精细化防火分级。

为确保通过认证，我们严格依据EN 50575等协调标准进行结构设计，并将严苛的成束燃烧测试纳入出厂必检。CE认证不仅赋予产品进入欧洲工程市场的合规资格，更是我们在国际招标中以严谨技术指标破除贸易壁垒、建立海外信任度的关键硬通货。

CCC | 中国强制性产品认证

CCC（中国强制性产品认证）是依据国家法律法规实施的最基本的市场准入制度，更是衡量产品安全、保障公众生命财产安全的重要防线。这项认证直指具体产品安全性能的“硬指标”。

我公司生产的电线电缆产品已全面通过CCC认证，意味着我们经受住了绝缘、阻燃、导电等各项国家硬性安全标准的严格考验，也代表了对产品质量全生命周期的精细把控。品质是根基、合规是常态、安全是底线，这不仅是法规的强制要求，更是我们给予每位终端用户最可靠的电气保障。

IEC | 国际电工委员会

IEC（国际电工委员会）是全球电气技术标准的权威制定者。针对电线电缆行业，IEC 60227、IEC 60502 等标准是衡量产品电气性能、阻燃特性及环境适应性的国际基准。IEC标准就是衡量电气产品走向世界的“通用刻度尺”。对于电线电缆而言，对标 IEC 60227 或 IEC 60502 等国际标准，意味着我们的产品在绝缘电阻、耐压等级及燃烧性能上，具备了与全球同行直接对标的技术底气。

尊重国际基准，拒绝性能折损，是我们对待每一米电缆最纯粹的品质态度。

ROHS | 欧盟强制性标准

RoHS（有害物质限制指令）对电线电缆而言，不是一道简单的合规门槛，而是对绝缘层、护套及金属镀层中铅、镉等六大受限物质的“成分红线”。我们通过全面执行RoHS标准，把管控延伸到上游原材料的选型与入厂光谱检测环节，从源头切断有害物质残留。

这种贯穿全链路的原料筛查机制，不仅是为了满足欧盟等地区的出口环保准入门槛，更是为了确保线缆在整个生命周期内不给客户终端产品埋下合规隐患。这是线缆制造从“工艺达标”走向“生态脱敏”的真正跨越。

TÜV | 德国技术监督协会

TÜV认证（德国技术监督协会）的核心价值，在于其第三方机构提供的独立技术验证，而非企业自我声明。针对线缆产品，TÜV的考核门槛极为严苛，不仅涵盖电气性能与阻燃标准，更专门针对低温卷绕、抗紫外线老化、高温绝缘稳定性等极端工况进行长期耐久测试。

获得TÜV标志，意味着我们的产品具备了在复杂恶劣环境下的高安全裕度。这不仅是面向欧洲市场的坚实技术通行证，更是向高端制造客户交付“零妥协”工业安全标准的最直接证明。

ISO | 国际标准化组织

ISO9001、ISO14001、ISO45001 国际管理体系标准，是现代企业精细化运营的重要基石。我公司已全面通过这三项权威认证构建起严谨的‘铁三角’管理体系。

这意味着我们不仅通过严密的质量追溯机制确保产品与服务的稳定，同时深度践行低碳环保的绿色责任，并将‘以人为本’的安全理念贯穿于生产运营全过程。质量是根基、绿色是常态、安全是底线，这不仅是企业高质量发展的根本，更是我们给予每一位客户和员工最坚实、最可靠的承诺。

BS| 英国国家标准

BS是全球电线电缆领域极具影响力的技术规范，更是衡量产品电气性能与材料安全的国际标尺。我司生产的电线电缆产品严格遵循BS标准制造，这意味着我们的产品在导体导电率、绝缘层耐温及护套阻燃性等关键指标上，均达到了严苛的英标技术要求。

BS 不仅是对产品国际化品质的有力背书，更是我们在全球市场中专业实力的体现。以国际标准锻造每一米线缆，是我们对客户品质承诺的最硬核保障。

UL | 美国保险商试验所

UL是全球最权威的产品安全认证机构之一，其标准是北美电线电缆市场的法定‘通行证’。我司生产的线缆严格遵循UL标准制造，这意味着产品在导体线径精度、绝缘耐温等级及 VW-1 阻燃测试等核心指标上，均达到了严苛的北美安规要求。

UL 不仅是对产品物理与电气性能的国际顶尖背书，更是我司开拓全球市场的硬核实力体现。以国际安全标准打磨每一米线缆，是我们对海外客户最权威的品质承诺。

资质与认证 / QUALIFICATIONS & CERTIFICATIONS

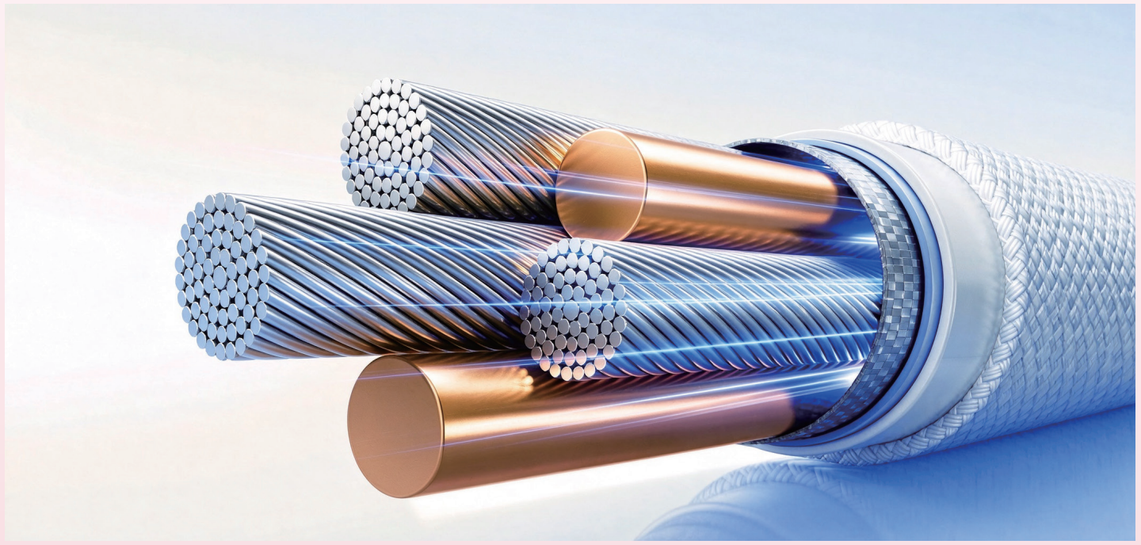

PS | Philippine Standard

The Philippine Standard Certification is an official mandatory product compliance certification in the Philippines. It is not merely a test; it is a strict management system that includes factory inspections and production consistency evaluations.
Obtaining the PS certification is the only way for enterprises to break through international trade barriers and build the credibility of their overseas brands. It demonstrates the strong quality control and performance fulfillment capabilities of the enterprises.

CE | EU Mandatory Product Certification

The CE mark is the EU's mandatory economic passport for cable products. Unlike China's CCC focusing on insulation, the EU enforces strict CPR regulations for building wires, grading fire performance like heat release, flame spread, and burning droplets. We strictly follow EN 50575 in design and enforce rigorous bundled combustion tests before shipment. CE certification not only clears European market entry but also serves as vital hard currency for breaking trade barriers and building overseas trust through stringent technical indicators.

CCC | China Compulsory Certificate

CCC is the fundamental market access system and an important safety defense, targeting hard performance indicators. Our wire and cable products have all passed CCC certification, enduring strict national tests for insulation, flame retardancy, and conductivity. This represents meticulous quality control throughout the entire life cycle. Quality is our foundation, compliance is our norm, and safety is our bottom line. This is not only a mandatory requirement but also the most reliable electrical guarantee we provide to all end users.

IEC | International Electrotechnical Commission

The IEC is the authoritative global body that formulates electrical technology standards. For wire and cable, IEC 60227 and IEC 60502 serve as the definitive international benchmarks for assessing electrical safety, flame retardancy, and environmental adaptability. As the universal measuring scale for global market access, meeting these IEC standards demonstrates our products possess full technical parity in insulation resistance, voltage rating, and combustion performance. Respecting these international benchmarks and rejecting performance degradation reflects our purest quality commitment towards every meter of cable we deliver.

ROHS | EU mandatory standards

The RoHS directive is not merely a compliance threshold for cables; rather, it is a strict "red line" against lead, cadmium, and other restricted substances within insulation, sheathing, and plating. By fully implementing RoHS standards, we rigidly control raw material sourcing and conduct spectral testing to eliminate hazardous residues at the source. This screening ensures EU export compliance and zero lifecycle risks for our customers' end-products. Ultimately, it signifies a true leap from simple process compliance to proactive "ecological insulation" in cable manufacturing.

TÜV | German Association for Technical Supervision

The core value of TÜV certification lies in independent third-party verification, not corporate self-declaration. For cables, its standards are exceptionally strict, covering not only electrical performance and flame retardancy but also long-term durability tests under extreme conditions like low-temperature winding, UV aging, and high-temperature stability. Obtaining the TÜV mark confirms our products maintain high safety margins in harsh environments. It is a solid technical passport for the European market and the ultimate proof of delivering "zero-compromise" industrial safety standards to high-end clients.

ISO | International Organization for Standardization

The ISO9001, ISO14001, and ISO45001 management system standards are the cornerstone of modern enterprise operations. Our company has fully obtained these three authoritative certifications, establishing a robust "trinity" management framework. This system ensures stable product quality via rigorous traceability, practices low-carbon environmental responsibility, and embeds a "people-oriented" safety culture across operations. Quality is our foundation, green our norm, and safety our baseline. This commitment drives our sustainable growth and is the solid reliability we provide to every customer and employee.

BS| British standard

BS is an influential technical specification in the global wire and cable industry, serving as the benchmark for evaluating electrical performance and material safety. Our wire and cable products strictly adhere to BS standards, meeting rigorous British requirements in conductor conductivity, insulation temperature resistance, and sheath flame retardancy. This serves as a strong endorsement of our international quality and reflects our professional strength in the global market. Manufacturing every meter to international standards is our reliable quality commitment to customers.

UL | American Insurance Laboratory

UL is a globally authoritative product safety certification body. Its rigorous standards act as the mandatory legal gateway to the North American cable market. Produced strictly to UL specifications, our cables ensure full compliance with stringent criteria for conductor precision, insulation grades, and VW-1 flame retardancy. This globally recognized mark endorses our superior electrical performance and signifies our strong global competitiveness. Upholding these global benchmarks is our authoritative quality pledge to customers.

研发与创新 / Research and Innovation

技术创新是企业发展的核心驱动力。公司组建了经验丰富的专业化研发团队，配备行业领先的研发设备，长期与UL、TÜV、BS等国际权威检测机构保持深度合作，持续引进、消化并优化国际先进线缆制造与检测技术，结合国内外复杂严苛的工程工况，不断提升产品结构与核心性能。

Technological innovation is the core driving force of the company's development. The company has established an experienced professional R&D team equipped with industry-leading R&D facilities, and maintains long-term in-depth cooperation with internationally authoritative testing institutions including UL, TÜV, and BS. By continuously introducing, assimilating, and optimizing internationally advanced cable manufacturing and testing technologies, and combining them with complex and demanding engineering conditions both domestically and internationally, the company continuously enhances its product structures and core performance.











目前公司已拥有40余项国家授权技术专利，核心技术处于行业领先水平。其中，自主研发的柔性矿物绝缘防火电缆可在950-1000℃极端高温环境下持续供电3小时以上，有效保障火灾场景下消防、应急及关键设备电力回路的连续运行，显著提升工程安全等级；新能源汽车高压线缆具备优异的耐热、耐磨损、抗老化及高柔韧性能，可适应新能源车辆复杂的动态运行环境；全系列电缆桥架、抗震支吊架及电缆附件均按照国内外高端工程标准设计制造，与线缆系统高度匹配，确保整套电力系统长期安全、稳定、可靠运行。

To date, the company holds more than 40 nationally authorized technology patents, with core technologies at the industry's leading level. Notably, the independently developed flexible mineral-insulated fire-resistant cable can maintain continuous power supply for over 3 hours under extreme high temperatures of 950-1000℃, effectively ensuring uninterrupted operation of fire safety, emergency, and critical equipment power circuits during fire scenarios and significantly enhancing engineering safety levels. High-voltage cables for new energy vehicles feature excellent heat resistance, wear resistance, aging resistance, and high flexibility, adapting to the complex dynamic operating environments of new energy vehicles. The full range of cable trays, seismic support systems, and cable accessories are designed and manufactured in accordance with high-end domestic and international engineering standards, highly compatible with cable systems to ensure the long-term safe, stable, and reliable operation of the entire power system.

公司荣誉 / COMPANY PROFILE

















公司荣誉 / COMPANY PROFILE

凭借领先的技术创新能力、严格的品质管控体系和成熟的规模化制造能力，公司先后荣获多项权威认定，被评为国家高新技术企业、福建省专精特新企业、福建省科技小巨人领军企业、福建省战略新兴产业百强企业，产品入选福州市名优产品目录。公司产品广泛应用于海内外电力基建、新能源及工业项目，出口至东南亚、中东、欧洲、非洲等多个国家和地区，凭借稳定的交付能力与可靠的品质表现赢得客户的广泛认可。

With leading technological innovation capabilities, a strict quality control system, and mature large-scale manufacturing capabilities, the company has received numerous authoritative recognitions, including National High-Tech Enterprise, Fujian Province Specialized and Sophisticated Enterprise, Fujian Province Science and Technology Little Giant Leading Enterprise, and Fujian Province Top 100 Strategic Emerging Industry Enterprises, with its products listed in the Fuzhou Famous and Quality Product Catalog. The company's products are widely used in power infrastructure, renewable energy, and industrial projects at home and abroad, and exported to multiple countries and regions across Southeast Asia, the Middle East, Europe, and Africa, earning widespread customer recognition through stable delivery capabilities and reliable quality performance.

全球市场覆盖

GLOBAL MARKET COVERAGE

01 东南亚 Southeast Asia

02 中东 Middle East

03 欧洲 Europe

04 非洲 Africa

工程服务 / ENGINEERING SERVICE

公司的核心价值不仅在于高品质产品的交付，更在于覆盖项目全生命周期的工程服务能力。公司可为客户提供技术规格评估、项目方案定制、成套系统设计、投标技术文件编制、现场技术支持及售后运维等全方位服务；针对外贸出口需求，同步提供多语种技术支持、国际标准合规咨询、出口包装与单证办理、跨境物流统筹、海外项目现场指导等专项配套服务。公司致力于为国内外EPC工程承包商、公用事业运营商、新能源投资方及国际贸易合作伙伴提供高效、专业、本地化的服务保障。

The company's core value lies not only in the delivery of high-quality products, but also in its full-lifecycle engineering service capabilities. The company provides comprehensive services including technical specification evaluation, project solution customization, integrated system design, tender technical documentation, on-site technical support, and after-sales operation and maintenance. For export requirements, it additionally offers specialized supporting services including multilingual technical support, international standard compliance consulting, export packaging and documentation, cross-border logistics coordination, and overseas

服务流程 / SERVICE PROCESS

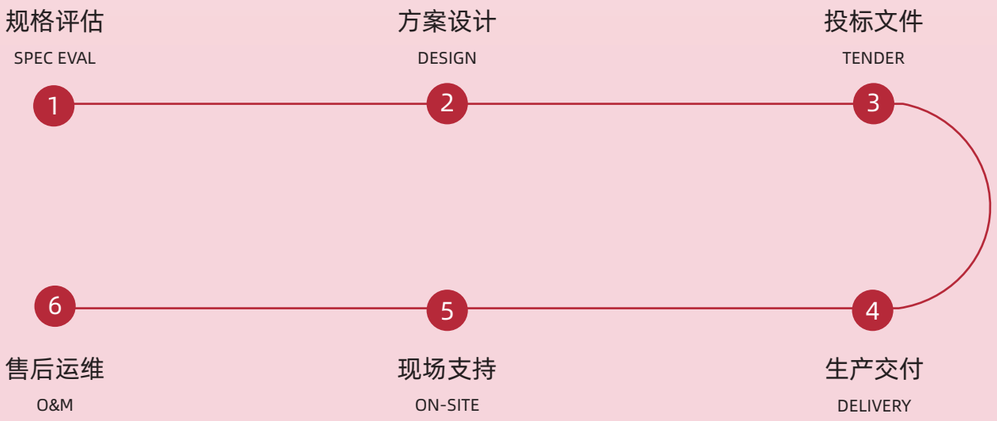

全方位服务 / FULL-SCOPESERVICES

- 技术规格评估 Technical specification evaluation
- 项目方案定制 Project solution customization
- 成套系统设计 Integrated system design
- 投标技术文件编制 Tender technical documentation
- 现场技术支持 On-site technical support
- 售后运维服务 After-sales O&M services

外贸出口专项 / EXPORT SPECIALIZED

- 多语种技术支持 Multilingual technical support
- 国际标准合规咨询 International standard compliance
- 出口包装和单证办理 Export packaging & documentation
- 跨境物流统筹 Cross-border logistics
- 海外项目现场指导 Overseas on-site guidance

覆盖项目全生命周期的工程服务能力

FULL-LIFECYCLE ENGINEERING SERVICE CAPABILITIES

企业愿景

OUR VISION

面向未来，福建日日红电线电缆有限公司将始终秉持"质量第一、信誉第一、服务第一"的经营理念，持续深耕电力线缆领域，坚持技术创新与品质升级，不断完善全球化服务体系，立志成为国内领先、国际知名的电力系统解决方案供应商，以高性能、高安全性、高适配性的一体化电力系统解决方案，助力全球能源转型，推动绿色可持续发展。

Looking ahead, Fujian Ririhong Wire & Cable Co., Ltd. will always uphold the business philosophy of "Quality First, Reputation First, Service First," continue to deepen its expertise in the power cable industry, persist in technological innovation and quality upgrading, and continuously improve its global service system. The company aspires to become a domestically leading and internationally renowned power system solution provider, contributing to the global energy transition and promoting green and sustainable development through high-performance, high-safety, and high-adaptability integrated power system solutions.

FUJIAN RIRIHONG WIRE & CABLECO. , LTD.

RIRIHONG · VOLINIX

助力全球能源转型

推动绿色可持续发展

EMPOWERING GLOBAL ENERGY TRANSITION

PROMOTING GREEN & SUSTAINABLE DEVELOPMENT

质量第一 · 品质第一 · 服务第一

立志成为国内领先、国际知名的
电力系统解决方案供应商

QUALITY FIRST · REPUTATION FIRST · SERVICE FIRST

ASPIRING TO BECOME A DOMESTICALLY LEADING AND

INTERNATIONALLY RENOWNED POWER SYSTEM SOLUTION PROVIDER

FUJIAN RIRIHONG WIRE & CABLECO. , LTD.

RIRIHONG · VOLINIX

2015

福建日日红公司成立，注册资金5380万；闽侯县设基地，年产800万米电线电缆。

Fujian Riri Red company was established, registeredFund 53.8 million yuan; Minhou county base With an annual output of 8 million meters of wire and cable

2018

丹阳镇政府招商，建“日日红电缆产业园”，占地40000㎡，投资3.5亿；一、二期建成，年产能提升至2500万米。

Danyang town government investment, build "day red.Cable Industrial Park, covering an area of 40,000 square meters,An investment of 350 million; Phase I and Phase II completed, yearsCapacity increased to 25 million meters.

2020

增资至1.038亿，为中压电缆线引进及市场开发奠基。

Increased capital to 103.8 million, laying the foundation for the introduction of medium voltage cable lines and market development.

2021

引入 6-35kV 中压电缆线；启动三期、四期建设，投资 1.059 亿，填补福州 6-35kV 中压电缆研发生产空白。

Introduce 6－35 kV medium-voltage cable lines; launch Phase III and Phase IV construction with an investment of 105.9 million yuan, filling the gap in the R&D and production of 6－35 kV medium-voltage cables in Fujian.

2022

率先启动ERP、MES、品控、物流、在线OA等信息化系统建设，实现信息化、科技化工厂。

Take the lead in starting the construction of ERP, MES, quality control, logistics, online OA and other information systems, and realize information and science and technology chemical plants.

2023

加大周边区域市场的战略部署，望眼国际为目标，强化区域经营，先后设立了以福州为中心等多个分支机构，福州营销中心成立、成立日日红工程技术研究中心。

Increase the strategic deployment of the surrounding regional market, look at the international as the goal, strengthen the regional operation, has set up a number of branches with Fuzhou as the center, Fuzhou marketing center was established, and Ririhong Engineering Technology Research Center was established.

2024

公司先后与国内知名院校和科研机构建立长期稳定的战略研发合作关系，启动日日红电缆·电缆和光缆燃烧性能分级(A、B1、B2、B3)综合实验楼项目，并设立在建物理性能、力学、电气、阻燃耐火实验室等在内的6个实验室，预引进国内外先进研发设备30余台。

The company has established long-term and stable strategic R & D cooperation with well-known domestic universities and scientific research institutions, launched the Ririred cable, cable and optical cable combustion performance classification (A, B1, B2, B3) comprehensive experimental building project, and set up six laboratories including physical properties, mechanics, electrical, flame retardant and fire retardant laboratories under construction. More than 30 sets of advanced research and development equipment at home and abroad have been introducedand science and technology chemical plants.

2025

荣膺“福建省战略新兴企业100强”、“福州市50强”，标志着企业在战略性新兴产业领域的领先地位与创新实力获得权威认可。

Having been honored as one of the Top 100 Enterprisesin Fujian's Strategic Emerging Industries and Top 50 Enterprises of Fuzhou, the company's leading position and innovation strength in the field of strategic emerging industries have gained authoritative recognition.

CONTENTS 目录

01 通信数据系列 COMMUNICATION & DATA CABLES

1.1 对绞数据电缆 TWISTED PAIR DATA CABLES

CAT5 五类对绞数据电缆 …… 01
CAT5 CATEGORY 5 TWISTED PAIR DATA CABLE

CAT5E 超五类对绞数据电缆 …… 02
CAT5 CATEGORY 5 TWISTED PAIR DATA CABLE

CAT6 六类对绞数据电缆 …… 03
CAT6 CATEGORY 6 TWISTED PAIR DATA CABLE

CAT6A 超六类对绞数据电缆 …… 04
CAT6A CATEGORY 6A TWISTED PAIR DATA CABLE

CAT7 七类对绞数据电缆 …… 05
CAT7 CATEGORY 7 TWISTED PAIR DATA CABLE

1.2 主干通信电缆BACKBONE COMMUNICATION CABLES

室内大对数 主干通信电缆 …… 06
INDOOR LARGE PAIR COUNT COMMUNICATION CABLE

1.3 光纤光缆FIBER OPTIC CABLES

室内束状软光缆 …… 08
INDOOR BREAKOUT FIBER OPTIC CABLE

室外层绞式铠装光缆 …… 10
OUTDOOR ARMORED FIBER OPTIC CABLE

02 建筑布线系列 BUILDING WIRING SERIES

2.1 单芯建筑布电线SINGLE-CORE BUILDING WIRES

防潮聚氯乙烯绝缘建筑布电线 …… 12
TYPE TW 600V TYPE TW MOISTURE-RESISTANT PVC INSULATED BUILDING WIRE

耐热聚氯乙烯绝缘建筑布电线 …… 14
TYPE THW 600V TYPE THW HEAT-RESISTANT PVC INSULATED BUILDING WIRE

铜芯尼龙护套建筑布电线 …… 16
TYPE THHN/THWN-2 600V TYPE THHN/THWN-2 COPPER NYLON-JACKETED BUILDING WIRE

铝芯尼龙护套建筑布电线 …… 18
TYPE THHN/THWN-2 AL 600V TYPE THHN/THWN-2 ALUMINUM NYLON-JACKETED BUILDING WIRE

交联聚乙烯绝缘建筑布电线 …… 20
TYPE XHHW-2 600V TYPE XHHW-2 XLPE INSULATED BUILDING WIRE

耐火型铜芯尼龙护套建筑布电线TYPE …… 22
TYPEFR-THHN 600V TYPE FR-THHN FIRE-RESISTANT COPPER NYLON-JACKETED WIR

VOLINIX

2.2 柔性连接软线FLEXIBLE CONNECTION CORDS

扁形平行软线 24
300V SPT FLAT PARALLEL FLEXIBLE CORD

柔性电源软线 26
300/600V SJT/SVT FLEXIBLE POWER SUPPLY CORD

2.3 设备安装配线EQUIPMENT HOOK-UP WIRES

灯具配线 28
600V TF FIXTURE WIRE

安装用软铜绞线 30
600V FLEXIBLE STRANDED COPPER HOOK-UP WIRE

2.4 住宅布线电缆RESIDENTIAL WIRING CABLES

非金属护套住宅布线电缆 32
600V NM-B NON-METALLIC SHEATHED RESIDENTIAL CABLE

金属铠装住宅布线电缆 34
600V AC/BX ARMORED RESIDENTIAL CABLE

服务入口电缆 36
600V SER/SEU SERVICE ENTRANCE CABLE

地下馈线电缆 38
600V UF-B UNDERGROUND FEEDER CABLE

2.5 控制电缆CONTROL CABLES

多芯控制电缆 40
600V TC MULTI-CORE CONTROL CABLE

屏蔽型控制电缆 46
600V SHIELDED CONTROL CABLE

2.6 600V建筑配电电缆600V BUILDING POWER CABLES

耐热防潮橡胶绝缘单芯电力电缆 52
600V RHW-2 HEAT & MOISTURE RESISTANT RUBBER INSULATED POWER CABLE

金属铠装电力电缆 54
600V MC METAL CLAD POWER CABLE

桥架外露敷设型电力电缆 56
600V TC-ER TRAY CABLE-EXPOSED RUN

建筑服务入口进线电缆 58
600V TC-ER TRAY CABLE-EXPOSED RUN

便携式软电缆 60
PORTABLE CORD 600V PORTABLE POWER CABLE

电焊机电缆 62
600V FLEXIBLE POWER CABLE

橡胶软电缆 64
600V RUBBER FLEXIBLE CABLE

2.7 接地导体GROUNDING CONDUCTORS

裸铜绞线 接地导体 66
BARE COPPER STRANDED GROUNDING CONDUCTOR

03 低压电力电缆系列 LOW VOLTAGE POWER CABLE SERIES

3.1 低压电力电缆（0.6/1KV）LOW VOLTAGE POWER CABLES (0.6/1KV)

铜芯交联聚乙烯绝缘聚氯乙烯护套电力电缆 68
0.6/1KV CU/XLPE/PVC COPPER CONDUCTOR XLPE INSULATED PVC SHEATHED POWER CABLE

铜芯钢带铠装电力电缆 70
0.6/1KV CU/XLPE/SWA/PVC COPPER CONDUCTOR XLPE INSULATED STEEL TAPE ARMORED PVC SHEATHED POWER CABLE

铝芯交联聚乙烯绝缘聚氯乙烯护套电力电缆 72
0.6/1KV AL/XLPE/PVC ALUMINUM CONDUCTOR XLPE INSULATED PVC SHEATHED POWER CABLE

铝芯钢带铠装电力电缆 74
0.6/1KV AL/XLPE/SWA/PVC ALUMINUM CONDUCTOR XLPE INSULATED STEEL TAPE ARMORED PVC SHEATHED POWER CABLE

04 矿物质电力电缆系列 MINERAL INSULATED POWER CABLE SERIES

4.1 矿物绝缘电力电缆 MINERAL INSULATED POWER CABLES

柔性铜皱纹护套矿物绝缘电缆 76
0.6/1KV MICC-CWS FLEXIBLE COPPER CORRUGATED SHEATH MI CABLE

柔性铝皱纹护套矿物绝缘电缆 78
0.6/1KV MICA-CWS FLEXIBLE ALUMINUM CORRUGATED SHEATH MI CABLE

铜护套矿物绝缘电缆 80
750V MICC MINERAL INSULATED COPPER SHEATHED CABLE

低烟无卤阻燃电力电缆 82
0.6/1KV LSZH LOW SMOKE ZERO HALOGEN FLAME RETARDANT POWER CABLE

耐火电力电缆 84
0.6/1KV FIRE RESISTANT POWER CABLE

05 中压电力电缆系列 MEDIUM VOLTAGE POWER CABLE SERIES

5.1 中压电力电缆（5KV~35KV）MEDIUM VOLTAGE POWER CABLES (5KV~35KV)

铜/铝/铝合金导体中压电力电缆 86
5KV CU/AL/AL-ALLOY/XLPE/PVC MEDIUM VOLTAGE POWER CABLE

铜/铝/铝合金导体中压电力电缆 89
8KV CU/AL/AL-ALLOY/XLPE/PVC MEDIUM VOLTAGE POWER CABLE

VOLINIX

15KV CU/AL/AL-ALLOY/XLPE/PVC 铜/铝/铝合金导体中压电力电缆 92
15KV CU/AL/AL-ALLOY/XLPE/PVC MEDIUM VOLTAGE POWER CABLE

25KV CU/AL/AL-ALLOY/XLPE/PVC 铜/铝/铝合金导体中压电力电缆 95
25KV CU/AL/AL-ALLOY/XLPE/PVC MEDIUM VOLTAGE POWER CABLE

35KV CU/AL/AL-ALLOY/XLPE/PVC 铜/铝/铝合金导体中压电力电缆 98
35KV CU/AL/AL-ALLOY/XLPE/PVC MEDIUM VOLTAGE POWER CABLE

06 高压电力电缆系列 HIGH VOLTAGE POWER CABLE SERIES

6.1 高压电力电缆（110KV） HIGH VOLTAGE POWER CABLES (110KV)

64/110KV CU/XLPE 高压电力电缆 102
64/110KV CU/XLPE HIGH VOLTAGE POWER CABLE

07 架空裸导体系列 OVERHEAD BARE CONDUCTOR SERIES

7.1 架空裸导体 OVERHEAD BARE CONDUCTORS

全铝架空裸导体AAC 实心导体 104
SOLID CONDUCTOR AAC ALL-ALUMINUM OVERHEAD BARE CONDUCTOR

ACSR 钢芯铝绞线架空裸导体 106
ACSR ALUMINUM CONDUCTOR STEEL REINFORCED

AAAC 铝合金架空裸导体 108
AAAC ALL-ALUMINUM ALLOY CONDUCTOR

ACAR 铝合金芯铝绞线架空裸导体 110
ACAR ALUMINUM CONDUCTOR ALLOY REINFORCED

ACSS 全铝合金钢芯架空裸导体 112
ACSS ALUMINUM CONDUCTOR STEEL SUPPORTED

AW 铝包钢绞线架空裸导体 114
AW ALUMINUM-CLAD STEEL WIRE

TBC 铜绞线架空裸导体TBC实心导体 116
SOLID CONDUCTOR TBC HARD DRAWN COPPER CONDUCTOR

GW 镀锌钢绞线架空地线 118
GW GALVANIZED STEEL GROUND WIRE

08 新能源电缆系列 NEW ENERGY CABLE SERIES

8.1 光伏电缆 PV CABLES

1.5KV PV1-F 光伏专用电缆 120
1.5KV PV1-F PHOTOVOLTAIC CABLE

1.5KV H1Z2Z2-K 光伏专用电缆 122
1.5KV H1Z2Z2-K PHOTOVOLTAIC CABLE

PV AC COPPER 0.6/1KV 光伏系统交流铜芯电缆 124
PV AC COPPER 0.6/1KV PV SYSTEM AC COPPER CABLE

PV AC ALUMINUM 0.6/1KV 光伏系统交流铝合金电缆 126
PV AC ALUMINUM 0.6/1KV PV SYSTEM AC ALUMINUM ALLOY CABLE

PV AC ARMORED AL 0.6/1KV 光伏系统铠装铝合金电缆 128
PV AC ARMORED AL 0.6/1KV PV SYSTEM ARMORED ALUMINUM ALLOY CABLE

8.2 储能电缆 ENERGY STORAGE CABLES

ESS CABLE 1.5KV 储能系统连接电缆 130
ESS CABLE 1.5KV ENERGY STORAGE SYSTEM INTERCONNECTING CABLE

BATTERY CABLE 1.5KV 电池组连接电缆 132
BATTERY CABLE 1.5KV BATTERY PACK CONNECTING CABLE

PCS CABLE 0.6/1KV 储能变流器连接电缆 134
PCS CABLE 0.6/1KV PCS CONNECTING CABLE

8.3 充电桩电缆 EV CHARGING CABLES

AC CHARGING 450/750V 交流充电桩电缆 136
AC CHARGING 450/750V AC EV CHARGING CABLE

DC CHARGING 1.5KV 直流充电桩电缆 138
DC CHARGING 1.5KV DC EV CHARGING CABLE

PORTABLE CHARGER 450/750V 便携式充电枪电缆 140
PORTABLE CHARGER 450/750V PORTABLE EV CHARGING GUN CABLE

8.4 风力发电电缆 WIND POWER CABLES

WIND TURBINE 0.6/1KV 风力发电耐扭电缆 142
0.6/1KV WIND POWER TORSION RESISTANT CABLE

TOWER POWER 0.6/1KV 塔筒电力电缆 144
0.6/1KV TOWER POWER CABLE

NACELLE CONTROL 300/500V 机舱控制电缆 146
300/500V NACELLE CONTROL CABLE

VOLINIX

09 镀锌电缆桥架系列
HOT DIP GALVANIZED CABLE TRAY SERIES

9.1 镀锌槽式电缆桥架 …… 147
GALVANIZED TROUGH TYPE CABLE TRAY

9.2 镀锌托盘式电缆桥架 …… 149
GALVANIZED TRAY TYPE CABLE TRAY

9.3 镀锌梯式电缆桥架 …… 151
GALVANIZED LADDER TYPE CABLE TRAY

9.4 镀锌网格式电缆桥架 …… 153
GALVANIZED WIRE MESH CABLE TRAY

10 喷塑电缆桥架系列
POWDER COATED CABLE TRAY SERIES

10.1 喷塑槽式电缆桥架 …… 155
POWDER COATED TROUGH TYPE CABLE TRAY

10.2 喷塑托盘式电缆桥架 …… 157
POWDER COATED TRAY TYPE CABLE TRAY

10.3 喷塑梯式电缆桥架 …… 159
POWDER COATED LADDER TYPE CABLE TRAY

10.4 喷塑网格式电缆桥架 …… 161
POWDER COATED WIRE MESH CABLE TRAY

11 热浸锌电缆桥架系列
HOT DIP ZINC COATED CABLE TRAY SERIES

11.1 热浸锌槽式电缆桥架 …… 163
HOT DIP ZINC TROUGH TYPE CABLE TRAY

11.2 热浸锌托盘式电缆桥架 …… 165
HOT DIP ZINC TRAY TYPE CABLE TRAY

11.3 热浸锌梯式电缆桥架 …… 167
HOT DIP ZINC LADDER TYPE CABLE TRAY

12 防火电缆桥架系列
FIRE RESISTANT CABLE TRAY SERIES

12.1 防火槽式电缆桥架 …… 169
FIRE RESISTANT TROUGH TYPE CABLE TRAY

12.2 防火涂料型电缆桥架 …… 171
FIRE RETARDANT COATED CABLE TRAY

13 特种电缆桥架系列
SPECIAL CABLE TRAY SERIES

13.1 大跨距电缆桥架 …… 173
LONG SPAN CABLE TRAY

13.2 铝合金电缆桥架 …… 175
ALUMINUM ALLOY CABLE TRAY

13.3 不锈钢电缆桥架 …… 177
STAINLESS STEEL CABLE TRAY

13.4 玻璃钢电缆桥架 …… 179
FRP CABLE TRAY

14 电缆桥架配件
SPECIAL CABLE TRAY SERIES

14.1 弯通系列 …… 181
FITTINGS SERIES

14.2 支吊架系列 …… 183
SUPPORT AND HANGER SERIES

14.3 连接附件 …… 185
CONNECTION ACCESSORIES

VOLINIX

15 母线槽产品系列
BUSBAR TRUNKING SYSTEM SERIES

15.1 密集型母线槽 187
DENSE TYPE BUSBAR TRUNKING SYSTEM

15.2 空气型母线槽 189
AIR TYPE BUSBAR TRUNKING SYSTEM

15.3 母线槽插接箱 191
BUSBAR PLUG-IN BOX

16 抗震支架
SEISMIC BRACKET

16.1 侧向抗震支架 193
LATERAL SEISMIC BRACKET

16.2 纵向抗震支架 195
LONGITUDINAL SEISMIC BRACKET

17 附录
APPENDIX

附录A 电缆载流量对照表 197
APPENDIX A CABLE CURRENT CARRYING CAPACITY REFERENCE TABLE

附录B 电缆电压降计算表 199
APPENDIX B CABLE VOLTAGE DROP CALCULATION TABLE

附录C 电缆截面选择指南 201
APPENDIX C CABLE CROSS-SECTION SELECTION GUIDE

附录D 电缆最小弯曲半径表 203
APPENDIX D MINIMUM BENDING RADIUS OF CABLES

附录E 电缆敷设方式说明 205
APPENDIX E CABLE INSTALLATION METHODS DESCRIPTION

附录F 电缆安装注意事项 207
APPENDIX F CABLE INSTALLATION PRECAUTIONS

附录G 电缆储存与运输要求 209
APPENDIX G CABLE STORAGE AND TRANSPORTATION REQUIREMENTS

附录H 桥架支吊架间距表 211
APPENDIX H CABLE TRAY SUPPORT AND HANGER SPACING TABLE

附录I 桥架接地要求 213
APPENDIX I CABLE TRAY GROUNDING REQUIREMENTS

附录J 桥架安装注意事项 215
APPENDIX J CABLE TRAY INSTALLATION PRECAUTIONS

附录K 母线槽选型指南 217
APPENDIX K BUSWAY SELECTION GUIDE

附录L 抗震支架安装间距表 219
APPENDIX L SEISMIC BRACKET INSTALLATION SPACING TABLE

附录M 荷载等级说明 221
APPENDIX M LOAD GRADE DESCRIPTION

VOLINIX

VOLINIX

通信数据系列
Communication & Data Cables



章节概述 CHAPTER OVERVIEW:

本系列产品包括对绞数据电缆、主干通信电缆和光纤光缆，广泛用于综合布线系统、数据中心、楼宇自控等通信网络。产品采用优质材料和先进工艺，具有优良的传输性能和机械性能，支持高速数据传输和宽带通信应用。产品符合国际通用通信电缆标准。

This series includes twisted pair data cables, backbone communication cables and fiber optic cables, widely used in structured cabling systems, data centers and building automation networks. With high-quality materials and advanced technology, featuring excellent transmission performance and mechanical properties, supporting high-speed data transmission and broadband communication applications. Compliant with international communication cable standards.

01

1.1 对绞数据电缆 Twisted Pair Data Cables

Cat5 Category 5 Twisted Pair Data Cable

Cat5e Category 5e Twisted Pair Data Cable

Cat6 Category 6 Twisted Pair Data Cable

Cat6a Category 6a Twisted Pair Data Cable

Cat7 Category 7 4-Pair S/FTP Cable

Cat5 五类对绞数据电缆
Cat5 Category 5 Twisted Pair Data Cable





用途 Application

适用于住宅、写字楼、商场、工业园区的语音传输、低速数据网络、安防监控布线，是基础弱电工程、老旧网络改造的通用布线产品

Suitable for voice transmission, low-speed data network and security monitoring wiring in residences, office buildings, shopping malls and industrial parks. It is a general wiring product for basic weak current engineering and old network renovation.

结构 Construction

采用 4 对 8 芯高纯度无氧铜实心导体，导体外挤包高密度聚乙烯（HDPE）绝缘层，线对按标准节距绞合，外层挤包聚氯乙烯（PVC）外护套，整体结构圆整、线序清晰

Adopts 4 pairs 8 cores high-purity oxygen-free copper solid conductor. The conductor is extruded with HDPE insulation layer, and the wire pairs are stranded with standard pitch. The outer layer is extruded with PVC sheath, with round overall structure and clear wire sequence.

产品特性 Product Feature

传输带宽 100MHz，支持 100Mbps 传输速率；电气性能稳定，串扰、衰减参数优异；护套阻燃、耐潮湿、耐高低温，适配高温潮湿的室内敷设环境，施工便捷、性价比突出

Transmission bandwidth 100MHz, supporting 100Mbps transmission rate. Stable electrical performance with excellent crosstalk and attenuation parameters. The sheath is flame retardant, moisture-resistant and temperature-resistant, adapting to high temperature and humid indoor laying environment, with convenient construction and outstanding cost performance.

规格参数表 Specification Table

产品代号 Model No.	产品名称 Product Name	导体直径 Conductor Diameter	导体截面 Conductor Section	导体结构 Conductor Structure	绝缘材质 Insulation Material
LAN-CAT5-UTP-05-P	CAT5 UTP 4 对CAT5 UTP 4 Pairs	0.5 mm	0.196 mm²/ 芯 0.196 mm²/core	4 对 8 芯 实心无氧铜 4 pairs 8 cores solid OFC	HDPE 高密度聚乙烯
护套材质 Sheath Material	传输带宽 Bandwidth	最大传输速率 Max Transmission Rate	成品外径 (mm) Finished OD(mm)	标称重量 (kg/km) Nominal Weight(kg/km)	
PVC 聚氯乙烯	100 MHz	100 Mbps	5.2	9.5	

01

1.1 对绞数据电缆 Twisted Pair Data Cables

- Cat5 Category 5 Twisted Pair Data Cable
- Cat5e Category 5e Twisted Pair Data Cable
- Cat6 Category 6 Twisted Pair Data Cable
- Cat6a Category 6a Twisted Pair Data Cable
- Cat7 Category 7 4-Pair S/FTP Cable

Cat5e 超五类对绞数据电缆

Cat5e Category 5e Twisted Pair Data Cable



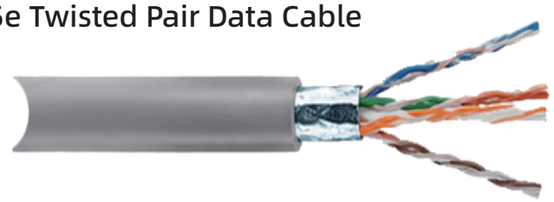

用途 Application

广泛用于写字楼、酒店、医院、数据机房的千兆局域网布线，支持宽带接入、安防监控、楼宇自控等弱电系统，是商业建筑、住宅精装的主流网络布线产品

Widely used in Gigabit LAN wiring of office buildings, hotels, hospitals and data rooms, supporting broadband access, security monitoring, building automation and other weak current systems. It is the mainstream network wiring product for commercial buildings and fine-decorated residences.

结构 Construction

4 对 8 芯高纯度无氧铜导体，分非屏蔽（UTP）与铝箔总屏蔽（FTP）两种结构；线对精密绞合，UTP 款优化节距设计降低串扰，FTP 款整体包覆铝箔屏蔽层，外层挤包阻燃 PVC 护套，结构稳定可靠

4 pairs 8 cores high-purity oxygen-free copper conductor, available in unshielded (UTP) and overall aluminum foil shielded (FTP) structures. Precise stranding of wire pairs. UTP type optimizes pitch design to reduce crosstalk. FTP type is integrally covered with aluminum foil shielding layer. The outer layer is extruded with flame-retardant PVC sheath, with stable and reliable structure.

产品特性 Product Feature

传输带宽 100MHz，短距离支持 1000Mbps 千兆传输；衰减、回波损耗、串扰指标优于 5 类线缆；屏蔽款可有效抵御电磁干扰，适配机房、强电井等复杂电磁环境；护套防潮阻燃，适配高温潮湿室内环境

Transmission bandwidth 100MHz, supporting 1000Mbps Gigabit transmission in short distance. Attenuation, return loss and crosstalk indicators are better than Category 5 cables. Shielded type can effectively resist electromagnetic interference, suitable for complex electromagnetic environments such as computer rooms and strong electric wells. Moisture-proof and flame-retardant sheath adapts to high temperature and humid indoor environment.

规格参数表 Specification Table

产品代号 Model No.	产品名称 Product Name	导体直径 Conductor Diameter	屏蔽类型 Shield Type	传输带宽 Bandwidth	最大传输速率 Max Transmission Rate	成品外径 (mm) Finished OD(mm)	标称重量 (kg/km) Nominal Weight (kg/km)
LAN-CAT5E-UTP-05-P	CAT5e UTP 4 对 CAT5e UTP 4 Pairs	0.5 mm	非屏蔽 UTP Unshielded UTP	100 MHz	1000 Mbps	5.3	9.8
LAN-CAT5E-FTP-05-P	CAT5e FTP 4 对 CAT5e FTP 4 Pairs	0.5 mm	铝箔总屏蔽FTP Overall Aluminum Foil FTP	100 MHz	1000 Mbps	5.8	11.2

01

1.1 对绞数据电缆 Twisted Pair Data Cables

- Cat5 Category 5 Twisted Pair Data Cable
- Cat5e Category 5e Twisted Pair Data Cable
- Cat6 Category 6 Twisted Pair Data Cable
- Cat6a Category 6a Twisted Pair Data Cable
- Cat7 Category 7 4-Pair S/FTP Cable

Cat6 6 类 4 对非屏蔽 / 铝箔总屏蔽对绞电缆

Cat6 Category 6 Twisted Pair Data Cable



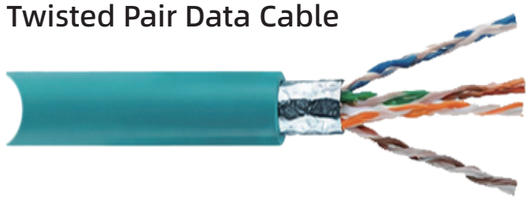

用途 Application

专用于高端写字楼、数据中心、医院、政务楼宇的千兆主干网络、设备间水平布线，支持高清视频传输、高速数据交换，是新建商业项目、机房升级的主流高性能布线产品

Specially used for Gigabit backbone network and horizontal wiring in equipment rooms of high-end office buildings, data centers, hospitals and government buildings. It supports HD video transmission and high-speed data exchange, and is the mainstream high-performance wiring product for new commercial projects and computer room upgrades.

结构 Construction

4 对 8 芯高纯度无氧铜导体，内置十字骨架隔离四对线缆，降低线对间串扰；分为非屏蔽（UTP）与铝箔总屏蔽（FTP）两款，外层挤包阻燃 PVC/LSZH 护套，结构紧致、机械强度高

4 pairs 8 cores high-purity oxygen-free copper conductor with built-in cross skeleton to isolate four pairs of cables and reduce crosstalk between pairs. Available in unshielded (UTP) and overall aluminum foil shielded (FTP) types. The outer layer is extruded with flame-retardant PVC/LSZH sheath, with compact structure and high mechanical strength.

产品特性 Product Feature

传输带宽 250MHz，稳定支持 1000Mbps 千兆传输，短距离可支持万兆传输；串扰、衰减、回波损耗性能优异；屏蔽款抗电磁干扰能力强，适配复杂电磁环境；低烟无卤款可选，满足高层建筑消防要求

Transmission bandwidth 250MHz, stably supporting 1000Mbps Gigabit transmission, and 10 Gigabit transmission in short distance. Excellent crosstalk, attenuation and return loss performance. Shielded type has strong anti-electromagnetic interference ability, suitable for complex electromagnetic environments. Low smoke zero halogen type is optional to meet fire protection requirements of high-rise buildings.

规格参数表 Specification Table

产品代号 Model No.	产品名称 Product Name	导体直径 Conductor Diameter	屏蔽类型 Shield Type	传输带宽 Bandwidth	最大传输速率 Max Transmission Rate	成品外径 (mm) Finished OD(mm)	标称重量 (kg/km) Nominal Weight (kg/km)
LAN-CAT6-UTP-58-P	CAT6 UTP 4 对 CAT6 UTP 4 Pairs	0.58 mm	非屏蔽 UTP Unshielded UTP	250 MHz	1000 Mbps	6.2	12.5
LAN-CAT6-FTP-58-P	CAT6 FTP 4 对 CAT6 FTP 4 Pairs	0.58 mm	铝箔总屏蔽FTP Overall Aluminum Foil FTP	250 MHz	1000 Mbps	6.8	14.8

01

1.1 对绞数据电缆 Twisted Pair Data Cables

Cat5 Category 5 Twisted Pair Data Cable

Cat5e Category 5e Twisted Pair Data Cable

Cat6 Category 6 Twisted Pair Data Cable

Cat6a Category 6a Twisted Pair Data Cable

Cat7 Category 7 4-Pair S/FTP Cable

Cat6a 超六类对绞数据电缆

Cat6a Category 6a Twisted Pair Data Cable



用途 Application

适用于数据中心万兆水平布线、高端写字楼核心网络、医疗 / 金融高速数据传输、基站室内配套布线，是下一代网络升级、高密度机房的优选布线产品

Suitable for 10 Gigabit horizontal wiring in data centers, core networks of high-end office buildings, high-speed data transmission in medical/financial industries, and indoor supporting wiring of base stations. It is the preferred wiring product for next-generation network upgrades and high-density computer rooms.

结构 Construction

4 对 8 芯高纯度无氧铜导体，采用精密绞合工艺优化传输性能；总屏蔽款整体包覆铝箔层，双屏蔽款增加金属编织网总屏蔽，有效隔绝内外电磁干扰；外层挤包低烟无卤（LSZH）或 PVC 护套，结构稳定、屏蔽性能优异

4 pairs 8 cores high-purity oxygen-free copper conductor with precision stranding process to optimize transmission performance. FTP type is integrally covered with aluminum foil layer, SFTP type adds metal braided mesh total shield to effectively isolate internal and external electromagnetic interference. The outer layer is extruded with LSZH or PVC sheath, with stable structure and excellent shielding performance.

产品特性 Product Feature

传输带宽 500MHz，全链路稳定支持 10Gbps 万兆传输；串扰衰减比、异线对串扰指标优异，可适配高密度布线场景；屏蔽性能优异，抗电磁干扰能力强；低烟无卤护套阻燃环保，符合高端建筑消防规范

Transmission bandwidth 500MHz, stably supporting 10Gbps 10 Gigabit transmission in the full link. Excellent crosstalk attenuation ratio and alien crosstalk indicators, suitable for high-density wiring scenarios. Excellent shielding performance and strong anti-electromagnetic interference ability. LSZH sheath is flame retardant and environmentally friendly, meeting fire protection specifications of high-end buildings.

规格参数表 Specification Table

产品代号 Model No.	产品名称 Product Name	导体直径 Conductor Diameter	屏蔽类型 Shield Type	传输带宽 Bandwidth	最大传输速率 Max Transmission Rate	成品外径 (mm) Finished OD(mm)	标称重量 (kg/km) Nominal Weight (kg/km)
LAN-CAT6A -FTP-58-L	CAT6a FTP 4 对 CAT6a FTP 4 Pairs	0.58 mm	铝箔总屏蔽 FTP Overall Aluminum Foil FTP	500 MHz	10 Gbps	7.0	16.5
LAN-CAT6A -SFTP-58-L	CAT6a S/FTP 4 对 CAT6a S/FTP 4 Pairs	0.58 mm	线对屏蔽+总编织屏蔽 S/FTP Pair Shield+Overall Braided S/FTP	500 MHz	10 Gbps	7.5	19.2

01

1.1 对绞数据电缆 Twisted Pair Data Cables

Cat5 Category 5 Twisted Pair Data Cable

Cat5e Category 5e Twisted Pair Data Cable

Cat6 Category 6 Twisted Pair Data Cable

Cat6a Category 6a Twisted Pair Data Cable

Cat7 Category 7 4-Pair S/FTP Cable

Cat7 7 类 4 对双屏蔽对绞电缆

Cat7 Category 7 4-Pair S/FTP Cable



用途 Application

专用于高端数据中心、金融证券机房、工业自动化控制、涉密网络系统的高速万兆 / 十万兆传输，适配强电磁干扰、高保密要求的严苛布线场景，是高端工业与数据项目的顶级布线方案

Specially used for high-speed 10G/40G transmission in high-end data centers, financial and securities computer rooms, industrial automation control and confidential network systems. Suitable for harsh wiring scenarios with strong electromagnetic interference and high confidentiality requirements. It is the top-level wiring solution for high-end industrial and data projects.

结构 Construction

采用 S/FTP 双屏蔽结构：每一线对单独包覆铝箔屏蔽，整体再加金属编织网总屏蔽；4 对 8芯高纯度无氧铜导体，精密绞合设计；外层挤包低烟无卤（LSZH）护套，整体结构紧致、屏蔽等级极高

Adopts S/FTP double shielding structure: each wire pair is individually covered with aluminum foil shield, and the whole is additionally covered with metal braided mesh total shield. 4 pairs 8 cores high-purity oxygen-free copper conductor with precision stranding design. The outer layer is extruded with LSZH sheath, with compact overall structure and extremely high shielding level.

产品特性 Product Feature

传输带宽 600MHz，支持 10Gbps 万兆传输，短距离可支持 40Gbps；双屏蔽结构几乎完全隔绝电磁干扰与信号泄露，保密性极强；传输性能稳定、衰减极低；低烟无卤护套阻燃无毒，符合最高等级消防与环保要求

Transmission bandwidth 600MHz, supporting 10Gbps transmission, and 40Gbps in short distance. The double shielding structure almost completely isolates electromagnetic interference and signal leakage with extremely strong confidentiality. Stable transmission performance and extremely low attenuation. LSZH sheath is flame retardant and non-toxic, meeting the highest level of fire protection and environmental protection requirements.

规格参数表 Specification Table

产品代号 Model No.	产品名称 Product Name	导体直径 Conductor Diameter	导体截面 Conductor Section	导体结构 Conductor Structure	屏蔽类型 Shield Type
LAN-CAT7 -SFTP-58-L	CAT7 S/FTP 4 对 CAT7 S/FTP 4 Pairs	0.58 mm	0.264 mm²/ 芯 0.264 mm²/core	4 对 8 芯 实心无氧铜 4 pairs 8 cores solid OFC	线对铝箔屏蔽 + 总编织屏蔽 S/FTP Pair Aluminum Foil + Overall Braided S/FTP
传输带宽 Bandwidth	最大传输速率 Max Transmission Rate	成品外径 (mm) Finished OD(mm)	标称重量 (kg/km) Nominal Weight(kg/km)		
600 MHz	10 Gbps	8.2	22.5		

室内大对数 主干通信电缆
Indoor Large Pair Count Communication Cable



用途 Application

主要用于建筑综合布线干线子系统、语音电话主干传输、楼宇弱电系统垂直布线，广泛适配写字楼、酒店、医院、园区的语音与低速数据主干组网需求

Mainly used for backbone subsystem of building integrated wiring, voice telephone backbone transmission, vertical wiring of building weak current systems. It is widely suitable for voice and low-speed data backbone networking in office buildings, hotels, hospitals and parks.

结构 Construction

采用多对 0.5mm 实心无氧铜导体对绞线，线对按色谱标准标识，整体成缆后包带绕包，外层挤包阻燃 PVC 或低烟无卤护套；结构紧凑、线序清晰，便于端接与施工

Adopts multiple pairs of 0.5mm solid oxygen-free copper twisted pairs, with standard color code identification. The cable is wrapped with tape after stranding, and extruded with flame-retardant PVC or LSZH outer sheath. Compact structure, clear wire sequence, easy for termination and construction.

产品特性 Product Feature

3 类支持 16MHz 传输带宽，满足语音与低速数据传输；5 类支持 100MHz 传输带宽，可承载百兆数据主干；电气性能稳定、衰减低、串扰小；护套防潮阻燃，适配高温潮湿的室内竖井与管道敷设环境

Category 3 supports 16MHz bandwidth for voice and low-speed data transmission; Category 5 supports 100MHz bandwidth for 100Mbps data backbone. Stable electrical performance, low attenuation and low crosstalk. Moisture-proof and flame-retardant sheath adapts to high temperature and humid indoor shaft and pipeline laying environment.

规格参数表 Specification Table

产品代号 Model No.	产品名称 Product Name	电缆等级 Cable Category	导体直径 Conductor Diameter	总对数 Total Pairs	屏蔽类型 Shield Type
LAN-MP -CAT3-25-P	3 类 25 对大对数电缆 CAT3 25-Pair Cable	3 类 Cat 3	0.5 mm	25 对 25 Pairs	非屏蔽 UTP Unshielded UTP
护套材质 Sheath Material	传输带宽 Bandwidth	成品外径 (mm) Finished OD(mm)	标称重量 (kg/km) Nominal Weight(kg/km)		
PVC 聚氯乙烯	16 MHz	11.5	32.0		

产品代号 Model No.	产品名称 Product Name	电缆等级 Cable Category	导体直径 Conductor Diameter	总对数 Total Pairs	屏蔽类型 Shield Type
LAN-MP -CAT3-50-P	3 类 50 对大对数电缆 CAT3 50-Pair Cable	3 类 Cat 3	0.5 mm	50 对 50 Pairs	非屏蔽 UTP Unshielded UTP
护套材质 Sheath Material	传输带宽 Bandwidth	成品外径 (mm) Finished OD(mm)	标称重量 (kg/km) Nominal Weight(kg/km)		
PVC 聚氯乙烯	16 MHz	15.5	58.0		

产品代号 Model No.	产品名称 Product Name	电缆等级 Cable Category	导体直径 Conductor Diameter	总对数 Total Pairs	屏蔽类型 Shield Type
LAN-MP -CAT3-100-P	3 类 100 对大对数电缆 CAT3 100-Pair Cable	3 类 Cat 3	0.5 mm	100 对 100 Pairs	非屏蔽 UTP Unshielded UTP
护套材质 Sheath Material	传输带宽 Bandwidth	成品外径 (mm) Finished OD(mm)	标称重量 (kg/km) Nominal Weight(kg/km)		
PVC 聚氯乙烯	16 MHz	21.0	112.0		

产品代号 Model No.	产品名称 Product Name	电缆等级 Cable Category	导体直径 Conductor Diameter	总对数 Total Pairs	屏蔽类型 Shield Type
LAN-MP -CAT5-25-P	5 类 25 对大对数电缆 CAT5 25-Pair Cable	5 类 Cat 5	0.5 mm	25 对 25 Pairs	非屏蔽 UTP Unshielded UTP
护套材质 Sheath Material	传输带宽 Bandwidth	成品外径 (mm) Finished OD(mm)	标称重量 (kg/km) Nominal Weight(kg/km)		
PVC 聚氯乙烯	100 MHz	12.0	35.0		

产品代号 Model No.	产品名称 Product Name	电缆等级 Cable Category	导体直径 Conductor Diameter	总对数 Total Pairs	屏蔽类型 Shield Type
LAN-MP -CAT5-50-P	5 类 50 对大对数电缆 CAT5 50-Pair Cable	5 类 Cat 5	0.5 mm	50 对 50 Pairs	非屏蔽 UTP Unshielded UTP
护套材质 Sheath Material	传输带宽 Bandwidth	成品外径 (mm) Finished OD(mm)	标称重量 (kg/km) Nominal Weight(kg/km)		
PVC 聚氯乙烯	100 MHz	16.5	65.0		

室内束状软光缆

Indoor Breakout Fiber Optic Cable

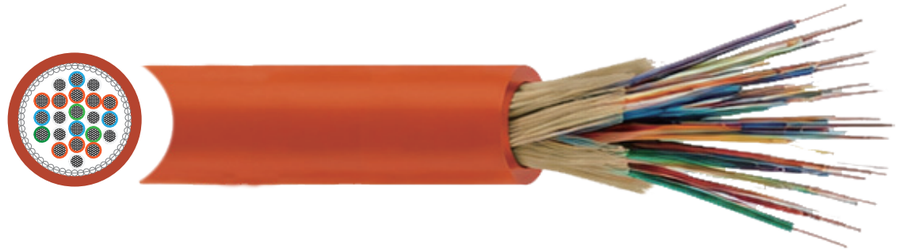

用途 Application

适用于数据中心、楼宇设备间、弱电竖井的室内光纤主干布线，以及机房内设备互联、光跳线延伸、终端点位接入，广泛适配商业建筑、IDC机房的高速光传输组网需求

Suitable for indoor fiber backbone wiring in data centers, building equipment rooms and weak current shafts, as well as equipment interconnection, optical patch cord extension and terminal point access in computer rooms. It is widely suitable for high-speed optical transmission networking in commercial buildings and IDC rooms.

结构 Construction

每芯光纤独立包覆紧套层，辅以芳纶纱作为加强元件，整体束状成缆后挤包低烟无卤（LSZH）外护套；光缆柔软、机械强度高，便于室内布放与端接

Each fiber is independently coated with tight buffer layer, with aramid yarn as reinforcement element. After stranded into bundle structure, it is extruded with LSZH outer sheath. The cable is soft with high mechanical strength, easy for indoor laying and termination.

产品特性 Product Feature

传输性能优异，衰减低、带宽大，支持千兆 / 万兆 / 十万兆光传输；芳纶加强抗拉性能优异，抗弯折、不易断裂；低烟无卤护套阻燃、低毒、无腐蚀性，符合室内高层建筑消防规范，适配高温潮湿环境

Excellent transmission performance with low attenuation and large bandwidth, supporting Gigabit/10G/40G optical transmission. Aramid reinforcement provides excellent tensile resistance, bending resistance and not easy to break. LSZH sheath is flame retardant, low-toxic and non-corrosive, meeting fire protection specifications of indoor high-rise buildings and adapting to high temperature and humid environment.

规格参数表 Specification Table

产品代号 Model No.	产品名称 Product Name	光纤类型 Fiber Type	芯数 Core Count	光缆结构 Cable Structure	加强元件 Reinforcement	护套材质 Sheath Material	工作波长 Working Wavelength	典型衰减 Typical Attenuation	成品外径 (mm) Finished OD(mm)	标称重量 (kg/km) Nominal Weight(kg/km)
FIB-IN-SM-2-L	2 芯单模室内束状光缆 2-Core SM Indoor Breakout Cable	G.652D 单模 G.652D Single Mode	2 芯 2 Cores	束状紧套 Breakout Tight Buffer	芳纶纱 Aramid Yarn	LSZH 低烟无卤	1310/1550 nm	≤0.36/≤0.22 dB/km	3.5	7.0
FIB-IN-SM-4-L	4 芯单模室内束状光缆 4-Core SM Indoor Breakout Cable	G.652D 单模 G.652D Single Mode	4 芯 4 Cores	束状紧套 Breakout Tight Buffer	芳纶纱 Aramid Yarn	LSZH 低烟无卤	1310/1550 nm	≤0.36/≤0.22 dB/km	4.5	10.0
FIB-IN-SM-6-L	6 芯单模室内束状光缆 6-Core SM Indoor Breakout Cabl	G.652D 单模 G.652D Single Mode	6 芯 6 Cores	束状紧套 Breakout Tight Buffer	芳纶纱 Aramid Yarn	LSZH 低烟无卤	1310/1550 nm	≤0.36/≤0.22 dB/km	5.5	13.5
FIB-IN-SM-8-L	8 芯单模室内束状光缆 8-Core SM Indoor Breakout Cable	G.652D 单模 G.652D Single Mode	8 芯 8 Cores	束状紧套 Breakout Tight Buffer	芳纶纱 Aramid Yarn	LSZH 低烟无卤	1310/1550 nm	≤0.36/≤0.22 dB/km	6.5	16.0
FIB-IN-SM-12-L	12 芯单模室内束状光缆 12-Core SM Indoor Breakout Cable	G.652D 单模 G.652D Single Mode	12 芯 12 Cores	束状紧套 Breakout Tight Buffer	芳纶纱 Aramid Yarn	LSZH 低烟无卤	1310/1550 nm	≤0.36/≤0.22 dB/km	7.5	18.0
FIB-IN-SM-24-L	24 芯单模室内束状光缆 24-Core SM Indoor Breakout Cable	G.652D 单模 G.652D Single Mode	24 芯 24 Cores	束状紧套 Breakout Tight Buffer	芳纶纱 Aramid Yarn	LSZH 低烟无卤	1310/1550 nm	≤0.36/≤0.22 dB/km	10.5	32.0

室外层绞式铠装光缆
Outdoor Armored Fiber Optic Cable



用途 Application

适用于园区建筑群主干光缆、城域接入网、户外长距离光传输，支持管道、架空、直埋多种敷设方式，广泛适配市政、园区、运营商的户外光纤组网需求

Suitable for campus building backbone optical cables, metropolitan access networks and long-distance outdoor optical transmission, supporting duct, aerial and direct burial laying methods. It is widely suitable for outdoor fiber networking of municipal, park and operators.

结构 Construction

采用层绞式结构，光纤松套管内填充纤膏，中心加强芯为磷化钢丝，钢带纵包铠装防护，外层挤包高密度聚乙烯（HDPE）外护套；防潮、防鼠咬、抗机械冲击，户外防护等级高

Adopts stranded structure, fiber loose tube filled with fiber jelly, central strength member is phosphated steel wire, steel tape longitudinally wrapped for armor protection, and extruded with HDPE outer sheath. Moisture-proof, rodent-proof, mechanical impact resistant, with high outdoor protection level.

产品特性 Product Feature

单模光纤传输距离远、衰减小，支持长距离万兆 / 十万兆光传输；多模光纤适用于中短距离高速局域网互联；钢带铠装机械强度高，抗侧压、抗拉、防潮防水；聚乙烯护套耐紫外线、耐老化、耐湿热，完美适配高温多雨、强紫外线的户外气候环境

Single mode fiber has long transmission distance and low attenuation, supporting long-distance 10G/40G optical transmission. Multi mode fiber is suitable for medium and short distance high-speed LAN interconnection. Steel tape armor provides high mechanical strength, lateral pressure resistance, tensile resistance and waterproof. PE sheath is UV-resistant, aging-resistant and humidity-resistant, perfectly adapting to the outdoor climate of high temperature, heavy rain and strong UV.

规格参数表 Specification Table

产品代号 Model No.	产品名称 Product Name	光纤类型 Fiber Type	芯数 Core Count	铠装结构 Armor Structure	护套材质 Sheath Material	工作波长 Working Wavelength	典型衰减 Typical Attenuation	成品外径 (mm) Finished OD(mm)	标称重量 (kg/km) Nominal Weight(kg/km)
FIB-OUT-SM-2-P	2 芯单模室外铠装光缆 2-Core SM Outdoor Armored Cable	G.652D 单模 G.652D Single Mode	2 芯 2 Cores	钢带铠装 Steel Tape Armor	PE 聚乙烯	1310/1550 nm	≤0.36/≤0.22 dB/km	9.5	78.0
FIB-OUT-SM-4-P	4 芯单模室外铠装光缆 4-Core SM Outdoor Armored Cable	G.652D 单模 G.652D Single Mode	4 芯 4 Cores	钢带铠装 Steel Tape Armor	PE 聚乙烯	1310/1550 nm	≤0.36/≤0.22 dB/km	10.0	85.0
FIB-OUT-SM-6-P	6 芯单模室外铠装光缆 6-Core SM Outdoor Armored Cable	G.652D 单模 G.652D Single Mode	6 芯 6 Cores	钢带铠装 Steel Tape Armor	PE 聚乙烯	1310/1550 nm	≤0.36/≤0.22 dB/km	10.5	90.0
FIB-OUT-SM-8-P	8 芯单模室外铠装光缆 8-Core SM Outdoor Armored Cable	G.652D 单模 G.652D Single Mode	8 芯 8 Cores	钢带铠装 Steel Tape Armor	PE 聚乙烯	1310/1550 nm	≤0.36/≤0.22 dB/km	10.8	92.0
FIB-OUT-SM-12-P	12 芯单模室外铠装光缆 12-Core SM Outdoor Armored Cable	G.652D 单模 G.652D Single Mode	12 芯 12 Cores	钢带铠装 Steel Tape Armor	PE 聚乙烯	1310/1550 nm	≤0.36/≤0.22 dB/km	11.0	95.0
FIB-OUT-SM-24-P	24 芯单模室外铠装光缆 24-Core SM Outdoor Armored Cable	G.652D 单模 G.652D Single Mode	24 芯 24 Cores	钢带铠装 Steel Tape Armor	PE 聚乙烯	1310/1550 nm	≤0.36/≤0.22 dB/km	12.0	115.0
FIB-OUT-SM-48-P	48 芯单模室外铠装光缆 48-Core SM Outdoor Armored Cable	G.652D 单模 G.652D Single Mode	48芯 48 Cores	钢带铠装 Steel Tape Armor	PE 聚乙烯	1310/1550 nm	≤0.36/≤0.22 dB/km	14.5	165.0
FIB-OUT-SM-96-P	96 芯单模室外铠装光缆 96-Core SM Outdoor Armored Cable	G.652D 单模 G.652D Single Mode	96 芯 96 Cores	钢带铠装 Steel Tape Armor	PE 聚乙烯	1310/1550 nm	≤0.36/≤0.22 dB/km	17.5	230.0
FIB-OUT-SM-144-P	144 芯单模室外铠装光缆 144-Core SM Outdoor Armored Cable	G.652D 单模 G.652D Single Mode	144 芯 144 Cores	钢带铠装 Steel Tape Armor	PE 聚乙烯	1310/1550 nm	≤0.36/≤0.22 dB/km	20.5	310.0

VOLINIX

建筑布线系列

Building Wiring Series

章节概述 CHAPTER OVERVIEW:

本系列产品包括建筑布电线、柔性连接软线、住宅布线电缆、控制电缆等，广泛用于各类建筑的室内配电和控制系统。产品采用优质铜导体，绝缘材料包括PVC、XLPE、橡胶等多种类型，可满足不同环境和用途的需求。产品符合国际通用建筑布线标准。

This series includes building wires, flexible cords, residential wiring cables and control cables, widely used for indoor power distribution and control systems in various buildings. With high-quality copper conductors and various insulation materials including PVC, XLPE and rubber, suitable for different environments and applications. Compliant with international building wiring standards.



防潮聚氯乙烯绝缘建筑布电线

Type TW 600V Type TW Moisture-Resistant PVC Insulated Building Wire



用途 Application

用于住宅室内配电布线，适配 600V 及以下回路，干湿环境均可使用，长期工作温度不超过 60℃，是基础家装与普通建筑配电的经济型布电线

Used for indoor residential power distribution wiring, suitable for circuits of 600V and below, applicable to both dry and wet environments. Long-term operating temperature does not exceed 60℃. It is an economical building wire for basic home decoration and ordinary building power distribution.

结构 Construction

导体为实心或多股绞合软铜导体，外层挤包无铅阻燃聚氯乙烯绝缘层；结构简单，壁厚均匀

Conductor is solid or stranded soft copper conductor, with lead-free flame-retardant PVC insulation layer extruded on the outer layer. Simple structure with uniform wall thickness.

产品特性 Product Feature

聚氯乙烯绝缘防潮、阻燃性能优异，电气性能稳定；价格经济，施工便捷；适配普通住宅、临时建筑等对耐温要求不高的配电场景

Excellent PVC insulation in moisture resistance and flame retardancy with stable electrical performance. Economical price and convenient construction. Suitable for power distribution scenarios with low temperature resistance requirements such as ordinary residences and temporary buildings.

规格参数表 Specification Table

产品代号 Model No.	标称截面 Nominal Section (mm^2)	对应规格 AWG / MCM	导体结构 Conductor Structure	绝缘壁厚 Insulation Thickness (mm)	成品外径 Finished OD (mm)	标称重量 Nominal Weight (kg/km)	空气中载流量 Ampacity in Free Air (A)	20℃最大直流电阻 Max DC Resistance @20℃ (Ω/km)
BC-TW -1C-20	2.0	14 AWG	7×0.60	0.80	3.40	27	20	8.80
BC-TW -1C-35	3.5	12 AWG	7×0.80	0.80	4.00	42	25	5.00
BC-TW -1C-55	5.5	10 AWG	7×1.00	0.80	4.60	62.8	35	3.20
BC-TW -1C-80	8.0	8 AWG	7×1.20	1.20	6.00	97.4	45	2.20
BC-TW -1C-14	14	6 AWG	7×1.60	1.60	8.00	171.2	60	1.30
BC-TW -1C-22	22	4 AWG	7×2.00	1.60	9.20	251.2	80	0.800
BC-TW -1C-30	30	2 AWG	7×2.30	1.60	10.10	329.0	100	0.600
BC-TW -1C-38	38	1 AWG	19/1.60	2.00	12.00	429.3	120	0.500
BC-TW -1C-50	50	1/0 AWG	19/1.80	2.00	13.00	545.2	140	0.400
BC-TW -1C-60	60	2/0 AWG	19/2.00	2.00	14.00	643.3	160	0.300
BC-TW -1C-80	80	3/0 AWG	19/2.30	2.00	15.50	835.0	195	0.200
BC-TW. -1C-100	100	4/0 AWG	19/2.60	2.00	17.0	1026.7	220	0.200
BC-TW -1C-125	125	250 MCM	37/2.09	2.40	19.4	1298.7	215	0.140
BC-TW -1C-150	150	300 MCM	37/2.29	2.40	20.8	1536.5	240	0.120
BC-TW -1C-200	200	400 MCM	37/2.64	2.40	23.3	2008.3	280	0.0870
BC-TW -1C-250	250	500 MCM	37/2.95	2.40	25.5	2477.0	320	0.0690
BC-TW. -1C-325	325	650 MCM	61/2.62	2.80	29.2	3229.0	375	0.0540
BC-TW -1C-400	400	800 MCM	61/2.92	2.80	31.9	3930.9	420	0.0440
BC-TW -1C-500	500	1000 MCM	61/3.25	2.80	34.9	4858.8	480	0.0350

耐热聚氯乙烯绝缘建筑布电线

Type THW 600V Type THW Heat-Resistant PVC Insulated Building Wire



用途 Application

用于住宅、商业建筑的室内配电布线，适配 600V 及以下回路，干湿环境均可使用，长期工作温度不超过 75℃，是民用建筑配电的通用型布电线

Used for indoor power distribution wiring of residential and commercial buildings, suitable for circuits of 600V and below, applicable to both dry and wet environments. Long-term operating temperature does not exceed 75℃. It is a general-purpose building wire for civil building power distribution.

结构 Construction

导体为实心或多股绞合软铜导体，外层挤包无铅阻燃聚氯乙烯绝缘层；绝缘层壁厚均匀，电气性能稳定

Conductor is solid or stranded soft copper conductor, with lead-free flame-retardant PVC insulation layer extruded on the outer layer. Uniform insulation wall thickness with stable electrical performance.

产品特性 Product Feature

聚氯乙烯绝缘阻燃、耐热、防潮性能均衡；线体柔韧性好，施工敷设便捷；规格覆盖全面，适配从终端回路到主干配电的全场景布线需求

Balanced PVC insulation performance in flame retardancy, heat resistance and moisture resistance. Good wire body flexibility, convenient for construction and laying. Complete specification coverage, adapting to full-scenario wiring requirements from terminal circuits to backbone power distribution.

规格参数表 Specification Table

产品代号 Model No.	标称截面 Nominal Section (mm²)	对应规格 AWG / MCM	导体结构 Conductor Structure	绝缘壁厚 Insulation Thickness (mm)	成品外径 Finished OD (mm)	标称重量 Nominal Weight (kg/km)	空气中载流量 Ampacity in Free Air (A)	20℃最大直流电阻 Max DC Resistance @20℃ (Ω/km)
BC-THW-1C-20	2.0	14 AWG	7/0.60	0.80	3.40	27.3	20	8.80
BC-THW-1C-35	3.5	12 AWG	7/0.80	0.80	4.00	42.8	25	5.00
BC-THW-1C-55	5.5	10 AWG	7/1.00	0.80	4.60	62.8	35	3.20
BC-THW-1C-80	8.0	8 AWG	7/1.24	1.20	6.10	98.1	45	2.00
BC-THW-1C-14	14	6 AWG	7/1.56	1.60	7.90	170.4	65	1.30
BC-THW-1C-22	22	4 AWG	7/1.96	1.60	9.10	250.3	85	0.80
BC-THW-1C-30	30	2 AWG	7/2.48	1.60	10.6	332.9	115	0.510
BC-THW-1C-42	42	1 AWG	19/1.68	2.00	11.8	427.5	130	0.410
BC-THW-1C-50	50	1/0 AWG	19/1.78	2.00	12.90	544.3	150	0.320
BC-THW-1C-60	60	2/0 AWG	19/2.00	2.00	14.00	643.3	175	0.260
BC-THW-1C-80	80	3/0 AWG	19/2.26	2.00	15.30	833.2	200	0.210
BC-THW-1C-100	100	4/0 AWG	19/2.56	2.00	16.80	1024.8	230	0.160
BC-THW-1C-125	125	250 MCM	37/2.09	2.40	19.40	1298.7	255	0.140
BC-THW-1C-150	150	300 MCM	37/2.29	2.40	20.80	1536.5	285	0.120
BC-THW-1C-200	200	400 MCM	37/2.64	2.40	23.30	2008.3	335	0.0870
BC-THW-1C-250	250	500 MCM	37/2.95	2.40	25.50	2477.0	385	0.0690
BC-THW-1C-325	325	650 MCM	61/2.62	2.80	29.20	3229.0	450	0.0540
BC-THW-1C-400	400	800 MCM	61/2.92	2.80	31.90	3930.9	505	0.0440
BC-THW-1C-500	500	1000 MCM	61/3.25	2.80	34.90	4858.8	575	0.0350

铜芯尼龙护套建筑布电线

Type THHN/THWN-2 600V Type THHN/THWN-2 Copper Nylon-Jacketed Building Wire



用途 Application

通用型 600V 建筑布电线，可用作动力、照明与控制回路布线，适配干湿环境，干燥与潮湿环境长期工作温度均可达 90℃，广泛应用于建筑电气、工业配电等场景

General purpose 600V building wire, used for power, lighting and control circuit wiring, suitable for dry and wet environments. Long-term operating temperature can reach 90℃ in both dry and wet environments, widely used in building electrical, industrial power distribution and other scenarios.

结构 Construction

导体为实心或多股绞合软铜导体，内层挤包无铅阻燃聚氯乙烯绝缘，外层挤包光滑耐磨的尼龙护套；整体结构紧致，外径尺寸小

Conductor is solid or stranded soft copper conductor. The inner layer is extruded with lead-free flame-retardant PVC insulation, and the outer layer is extruded with smooth and wear-resistant nylon jacket. Compact overall structure with small outer diameter.

产品特性 Product Feature

聚氯乙烯绝缘耐热、耐油、耐气体腐蚀、阻燃性能优异；尼龙护套表面光滑、机械强度高、耐磨抗冲击，便于穿管敷设，相同管径下可容纳更多线缆；耐温等级高，载流量大，适配高标准建筑电气布线需求

PVC insulation has excellent heat resistance, oil resistance, gas corrosion resistance and flame retardancy. Smooth nylon jacket surface with high mechanical strength, wear resistance and impact resistance, convenient for conduit laying, and more cables can be accommodated under the same pipe diameter. High temperature resistance grade and large ampacity, meeting high-standard building electrical wiring requirements.

规格参数表 Specification Table

产品代号 Model No.	标称截面 Nominal Section (mm^2)	对应规格 AWG / MCM	导体结构 Conductor Structure	PVC 绝缘壁厚 PVC Insulation Thickness (mm)	尼龙护套壁厚 Nylon Jacket Thickness (mm)	成品外径 Finished OD (mm)	标称重量 Nominal Weight(kg/km)	空气中载流量 Ampacity in Free Air (A)	20℃最大直流电阻 Max DC Resistance @20℃ (Ω/km)
BC-THHN-1C-20	2.0	14 AWG	7/0.60	0.40	0.10	2.80	22.8	25	8.80
BC-THHN-1C-35	3.5	12 AWG	7/0.80	0.40	0.10	3.40	37.4	30	5.00
BC-THHN-1C-55	5.5	10 AWG	7/1.00	0.50	0.10	4.20	58.4	40	3.20
BC-THHN-1C-80	8.0	8 AWG	7/1.20	0.80	0.13	5.50	89.7	50	2.00
BC-THHN-1C-14	14	6 AWG	7/1.60	0.80	0.13	6.70	148.1	70	1.30
BC-THHN-1C-22	22	4 AWG	7/2.00	1.00	0.15	8.30	232.1	90	0.80
BC-THHN-1C-30	30	2 AWG	7/2.30	1.00	0.15	9.20	307.9	115	0.510
BC-THHN-1C-38	38	1 AWG	19/1.60	1.30	0.18	11.0	400.3	130	0.410
BC-THHN-1C-50	50	1/0 AWG	19/1.80	1.30	0.18	12.0	513.7	150	0.320
BC-THHN-1C-60	60	2/0 AWG	19/2.00	1.30	0.18	13.0	609.2	170	0.260
BC-THHN-1C-80	80	3/0 AWG	19/2.30	1.30	0.18	14.5	797.1	205	0.210
BC-THHN-1C-100	100	4/0 AWG	19/2.60	1.30	0.18	16.0	984.9	225	0.160
BC-THHN-1C-125	125	250 MCM	37/2.10	1.60	0.18	17.0	1244.4	265	0.140
BC-THHN-1C-150	150	300 MCM	37/2.30	1.60	0.20	19.7	1478.1	295	0.120
BC-THHN-1C-200	200	400 MCM	37/2.60	1.60	0.20	21.8	1939.9	355	0.0870
BC-THHN-1C-250	250	500 MCM	37/2.90	1.60	0.20	22.6	2401.7	400	0.0690
BC-THHN-1C-325	325	650 MCM	61/2.60	1.80	0.23	27.5	3121.8	470	0.0540
BC-THHN-1C-400	400	800 MCM	61/2.90	1.80	0.23	28.0	3813.6	515	0.0440
BC-THHN-1C-500	500	1000 MCM	61×3.20	1.80	0.23	30.8	4728.0	580	0.0350

铝芯尼龙护套建筑布电线

Type THHN/THWN-2 Al 600V Type THHN/THWN-2 Aluminum Nylon-Jacketed Building Wire



用途 Application

通用型 600V 大截面建筑布电线，可用作动力、照明主干回路布线，适配干湿环境，长期工作温度可达 90℃，是大电流配电回路的经济型选型

General purpose 600V large-section building wire, used for power and lighting backbone circuit wiring, suitable for dry and wet environments. Long-term operating temperature can reach 90℃. It is an economical choice for high-current power distribution circuits.

结构 Construction

导体为紧压绞合 8000 系列铝合金导体，内层挤包无铅阻燃聚氯乙烯绝缘，外层挤包光滑耐磨的尼龙护套；导体紧压后外径小，敷设利用率高

Conductor is compact stranded 8000 series aluminum alloy conductor. The inner layer is extruded with lead-free flame-retardant PVC insulation, and the outer layer is extruded with smooth and wear-resistant nylon jacket. Compact conductor has small outer diameter with high laying utilization rate.

产品特性 Product Feature

铝合金导体重量轻、成本经济，显著降低线路投资；聚氯乙烯绝缘耐热耐油、阻燃性能优异；尼龙护套耐磨抗冲击，穿管敷设便捷；适配大截面主干配电、工业厂房供电等场景

Lightweight and cost-effective aluminum alloy conductor significantly reduces line investment. PVC insulation has excellent heat resistance, oil resistance and flame retardancy. Wear-resistant and impact-resistant nylon jacket is convenient for conduit laying. Suitable for large-section backbone power distribution, industrial plant power supply and other scenarios.

规格参数表 Specification Table

产品代号 Model No.	标称截面 Nominal Section (mm^2)	对应规格 AWG / MCM	导体结构 Conductor Structure	PVC 绝缘壁厚 PVC Insulation Thickness (mm)	尼龙护套壁厚 Nylon Jacket Thickness (mm)	成品外径 Finished OD (mm)	标称重量 Nominal Weight(kg/km)	空气中载流量 Ampacity in Free Air (A)	20℃最大直流电阻 Max DC Resistance @20℃ (Ω/km)
BC-THHN-AL-1C-20	2.0	14 AWG	7/0.60	0.40	0.10	2.8	10.4	20	14.4
BC-THHN-AL-1C-35	3.5	12 AWG	7/0.80	0.40	0.10	3.4	15.7	25	8.20
BC-THHN-AL-1C-55	5.5	10 AWG	7/1.00	0.50	0.10	4.2	24.3	32	5.20
BC-THHN-AL-1C-80	8.0	8 AWG	7/1.20	0.80	0.13	5.5	40.1	40.1	3.60
BC-THHN-AL-1C-14	14	6 AWG	7/1.60	0.80	0.13	6.7	61.3	55	2.10
BC-THHN-AL-1C-22	22	4 AWG	7/2.00	1.00	0.15	8.3	95.7	70	1.30
BC-THHN-AL-1C-30	30	2 AWG	7/2.30	1.00	0.15	9.2	121.9	90	1.00
BC-THHN-AL-1C-38	38	1 AWG	19/1.60	1.30	0.18	11.0	164.7	105	0.800
BC-THHN-AL-1C-50	50	1/0 AWG	19/1.80	1.30	0.18	12.0	203.7	120	0.600
BC-THHN-AL-1C-60	60	2/0 AWG	19/2.00	1.30	0.18	13.0	237.2	135	0.500
BC-THHN-AL-1C-80	80	3/0 AWG	19/2.30	1.30	0.18	14.5	301.1	165	0.400
BC-THHN-AL-1C-100	100	4/0 AWG	19/2.60	1.30	0.18	16.0	364.9	180	0.300
BC-THHN-AL-1C-125	125	250 MCM	37/2.09	1.60	0.20	18.2	468.8	300	0.230
BC-THHN-AL-1C-150	150	300 MCM	37/2.29	1.60	0.20	19.6	547.5	335	0.190
BC-THHN-AL-1C-200	200	400 MCM	37/2.64	1.60	0.20	22.1	702.2	400	0.140
BC-THHN-AL-1C-250	250	500 MCM	37/2.95	1.60	0.20	24.2	854.5	450	0.115
BC-THHN-AL-1C-325	325	650 MCM	61/2.62	1.80	0.23	27.6	1108.4	515	0.0900
BC-THHN-AL-1C-400	400	800 MCM	61/2.92	1.80	0.23	30.3	1335.3	590	0.0730
BC-THHN-AL-1C-500	500	1000 MCM	61/3.25	1.80	0.23	33.3	1632.1	675	0.0580

交联聚乙烯绝缘建筑布电线

Type THHN/THWN-2 600V Type THHN/THWN-2 XLPE Insulated Building Wire



用途 Application

用于工业建筑、大型商业中心的配电干线与桥架敷设，适配干湿环境，长期工作温度可达90℃，也可用于户外、光伏配电等高温高湿场景

Used for distribution trunk lines and tray laying in industrial buildings and large commercial centers. Suitable for dry and wet environments with long-term operating temperature up to 90℃, also applicable to outdoor and photovoltaic power distribution scenarios.

结构 Construction

导体为绞合软铜导体，外层挤包交联聚乙烯（XLPE）绝缘层；绝缘壁厚均匀，无尼龙外护套，整体机械强度与耐温性能突出

Conductor is stranded soft copper, with cross-linked polyethylene (XLPE) insulation layer extruded on the outer layer. Uniform insulation wall thickness without nylon outer jacket, with outstanding mechanical strength and temperature resistance.

产品特性 Product Feature

交联聚乙烯（XLPE）绝缘耐热、耐湿、电气性能优异；无尼龙外护套，整体机械强度与耐温性能突出；耐温等级高，载流量大，适配工业建筑、大型商业中心配电干线与桥架敷设

Cross-linked polyethylene (XLPE) insulation is heat-resistant, moisture-resistant, and has excellent electrical properties; without nylon outer sheath, the overall mechanical strength and temperature resistance are outstanding; it has a high temperature rating, large current-carrying capacity, and is suitable for industrial buildings, large commercial centers, and the laying of distribution trunk lines and cable trays.

规格参数表 Specification Table

产品代号 Model No.	标称截面 Nominal Section (mm^2)	对应规格 AWG / MCM	导体结构 Conductor Structure	绝缘壁厚 Insulation Thickness (mm)	成品外径 Finished OD (mm)	标称重量 Nominal Weight (kg/km)	空气中载流量 Ampacity in Free Air (A)	20℃最大直流电阻 Max DC Resistance @20℃ (Ω/km)
BC-XHHW2-1C-20	2.0	14 AWG	7×0.60	0.80	3.40	27	20	8.80
BC-XHHW2-1C-35	3.5	12 AWG	7×0.80	0.80	4.00	42	25	5.00
BC-XHHW2-1C-55	5.5	10 AWG	7×1.00	0.80	4.60	62.8	35	3.20
BC-XHHW2-1C-80	8.0	8 AWG	7×1.20	1.20	6.00	97.4	45	2.20
BC-XHHW2-1C-14	14	6 AWG	7×1.60	1.60	8.00	171.2	60	1.30
BC-XHHW2-1C-22	22	4 AWG	7×2.00	1.60	9.20	251.2	80	0.800
BC-XHHW2-1C-30	30	2 AWG	7×2.30	1.60	10.10	329.0	100	0.600
BC-XHHW2-1C-38	38	1 AWG	19/1.60	2.00	12.00	429.3	120	0.500
BC-XHHW2-1C-50	50	1/0 AWG	19/1.80	2.00	13.00	545.2	140	0.400
BC-XHHW2-1C-60	60	2/0 AWG	19/2.00	2.00	14.00	643.3	160	0.300
BC-XHHW2-1C-80	80	3/0 AWG	19/2.30	2.00	15.50	835.0	195	0.200
BC-XHHW2-1C-100	100	4/0 AWG	19/2.60	2.00	17.0	1026.7	220	0.200
BC-XHHW2-1C-125	125	250 MCM	37/2.09	2.40	19.4	1298.7	215	0.140
BC-XHHW2-1C-150	150	300 MCM	37/2.29	2.40	20.8	1536.5	240	0.120
BC-XHHW2-1C-200	200	400 MCM	37/2.64	2.40	23.3	2008.3	280	0.0870
BC-XHHW2-1C-250	250	500 MCM	37/2.95	2.40	25.5	2477.0	320	0.0690
BC-XHHW2-1C-325	325	650 MCM	61/2.62	2.80	29.2	3229.0	375	0.0540
BC-XHHW2-1C-400	400	800 MCM	61/2.92	2.80	31.9	3930.9	420	0.0440
BC-XHHW2-1C-500	500	1000 MCM	61/3.25	2.80	34.9	4858.8	480	0.0350

耐火型铜芯尼龙护套建筑布电线

Type LSZH fire-resistant type (low smoke and halogen-free) 600V Type Fire-Resistant Copper Nylon-Jacketed Wire



用途 Application

专为消防报警、应急照明、疏散指示、消防水泵等消防设备供电回路设计，适配 600V 及以下需保持火灾供电完整性的场景，符合建筑消防规范要求

Specially designed for power supply circuits of fire alarms, emergency lighting, evacuation indicators, fire pumps and other fire-fighting equipment. Suitable for scenarios requiring circuit integrity under fire conditions of 600V and below, complying with building fire protection codes.

结构 Construction

导体外绕包耐高温耐火云母带，内层挤包阻燃聚氯乙烯（PVC）绝缘，外层挤包耐磨尼龙护套；在常规 THHN 结构基础上新增耐火功能层，整体尺寸与同规格普通 THHN 兼容

High-temperature resistant fire-resistant mica tape is wrapped around the conductor, inner layer is extruded with flame-retardant polyvinyl chloride (PVC) insulation, outer layer is extruded with wear-resistant nylon jacket. Fire-resistant functional layer is added based on conventional THHN structure, with overall dimensions compatible with ordinary THHN of the same specification.

产品特性 Product Feature

火灾条件下可维持一定时长的电路完整性，保障消防设备持续供电；耐温等级 90℃，载流量与普通 THHN 一致；阻燃、耐油、耐磨性能优异，可直接替代同规格普通 THHN 用于消防回路

Maintains circuit integrity for a certain duration under fire conditions to ensure continuous power supply for fire equipment. 90℃ temperature rating with the same ampacity as ordinary THHN. Excellent flame retardant, oil resistant and wear resistant properties, can directly replace ordinary THHN of the same specification for fire circuits.

规格参数表 Specification Table

产品代号 Model No.	标称截面 Nominal Section (mm^2)	对应规格 AWG / MCM	导体结构 Conductor Structure	成品外径 Finished OD (mm)	标称重量 Nominal Weight (kg/km)	空气中载流量 Ampacity in Free Air (A)	20℃最大直流电阻 Max DC Resistance @20℃ (Ω/km)
BC-FRTHHN-1C-20	2.0	14 AWG	7×0.60	3.2	25	20	8.80
BC-FRTHHN-1C-35	3.5	12 AWG	7×0.80	4.0	42	25	5.00
BC-FRTHHN-1C-55	5.5	10 AWG	7×1.00	4.6	62	35	3.20
BC-FRTHHN-1C-80	8.0	8 AWG	7×1.20	5.9	94	45	2.20
BC-FRTHHN-1C-14	14	6 AWG	7×1.60	7.1	153	65	1.30
BC-FRTHHN-1C-22	22	4 AWG	7/2.00	8.7	238	85	0.800
BC-FRTHHN-1C-30	30	2 AWG	7×2.30	9.6	314	105	0.600
BC-FRTHHN-1C-38	38	1 AWG	19/1.60	11.4	407	120	0.500
BC-FRTHHN-1C-50	50	1/0 AWG	19/1.80	12.4	521	140	0.400
BC-FRTHHN-1C-60	60	2/0 AWG	19/2.00	13.4	617	160	0.300
BC-FRTHHN-1C-80	80	3/0 AWG	19/2.30	14.9	806	190	0.200
BC-FRTHHN-1C-100	100	4/0 AWG	19/2.60	16.4	995	210	0.200
BC-FRTHHN-1C-125	125	250 MCM	37/2.10	18.7	1253	250	0.100
BC-FRTHHN-1C-150	150	300 MCM	37/2.30	20.1	1489	280	0.100
BC-FRTHHN-1C-175	175	350 MCM	37/2.47	21.0	2305	334	0.100
BC-FRTHHN-1C-200	200	400 MCM	37/2.64	22.2	2608	383	0.0870
BC-FRTHHN-1C-250	250	500 MCM	37/2.95	24.4	3230	432	0.0690
BC-FRTHHN-1C-325	325	650 MCM	61/2.62	27.0	4198	507	0.0540
BC-FRTHHN-1C-400	400	800 MCM	61/2.92	30.5	5131	556	0.0440
BC-FRTHHN-1C-500	500	1000 MCM	61/3.25	33.6	6362	626	0.0350

扁形平行软线

300V SPT Flat Parallel Flexible Cord



用途 Application

主要用于小型家用电器、照明灯具、音响设备的室内供电连接，适配 300V 及以下低压交流回路的柔性连接场景

Mainly used for indoor power supply connection of small household appliances, lighting fixtures and audio equipment, suitable for flexible connection scenarios of low-voltage AC circuits of 300V and below.

结构 Construction

导体为退火软铜多股绞合结构，线芯独立挤包聚氯乙烯（PVC）绝缘层，两芯平行排列后整体挤包扁形聚氯乙烯（PVC）外护套；线缆柔软，易于弯曲敷设

Conductor adopts annealed soft copper multi-strand structure. Each core is independently extruded with polyvinyl chloride (PVC) insulation layer. Two cores are arranged in parallel and integrally extruded with flat PVC outer sheath. The cord body is soft and easy to bend.

产品特性 Product Feature

线体柔软轻便，布线与端接便捷；聚氯乙烯（PVC）绝缘耐潮、耐磨、阻燃性能优异；颜色标识清晰，适配家装、小家电配套等批量应用场景，性价比突出

Soft and lightweight cord body, convenient for wiring and termination. polyvinyl chloride (PVC) insulation has excellent moisture resistance, wear resistance and flame retardancy. Clear color identification, suitable for batch application scenarios such as home decoration and small home appliance matching, with outstanding cost performance.

规格参数表 Specification Table

产品代号 Model No.	标称截面 Nominal Section (mm^2)	对应规格 AWG Size	导体结构 Conductor Stranding	绝缘壁厚 Insulation Thickness	成品尺寸(宽×厚) Finished Size (W×T)	标称重量 Nominal Weight	载流量 Ampacity
BC-SPT -2C-18	0.82	18 AWG	16/0.25	0.5	4.5x2.2	26	10
BC-SPT -2C-17	1.0	17 AWG	16/0.29	0.5	4.9x2.5	31	12
BC-SPT -2C-16	1.3	16 AWG	16/0.32	0.6	5.6x2.8	41	13
BC-SPT -2C-14	2.0	14 AWG	16/0.40	0.7	6.8x3.4	60	15
BC-SPT -2C-12	3.5	12 AWG	16/0.50	0.8	8.2x4.1	97	20
BC-SPT -2C-10	5.5	10 AWG	16/0.64	1.0	10.4x5.2	153	25

柔性电源软线

300/600V SJT/SVT Flexible Power Supply Cord



用途 Application

用于家用电器、电动工具、电源延长线、小型机械设备的供电连接，适配 300V/600V 及以下交流回路的柔性移动连接场景

Used for power supply connection of household appliances, electric tools, power extension cords and small mechanical equipment, suitable for flexible mobile connection scenarios of AC circuits of 300V/600V and below.

结构 Construction

导体为多股绞合退火软铜，每根线芯独立挤包聚氯乙烯（PVC）绝缘，多芯绞合成缆后整体挤包聚氯乙烯（PVC）外护套；线体柔软耐弯折

Conductor is multi-strand annealed soft copper. Each core is independently extruded with polyvinyl chloride (PVC) insulation. Multi-cores are stranded and integrally extruded with PVC outer sheath. The cord body is soft and bending-resistant.

产品特性 Product Feature

线体柔软柔韧，耐反复弯折拖拽；聚氯乙烯护套耐磨、耐油、阻燃性能优异；芯线颜色标识清晰，便于极性区分与端接施工

Soft and flexible cord body, resistant to repeated bending and dragging. PVC sheath has excellent wear resistance, oil resistance and flame retardancy. Clear core color identification, convenient for polarity distinction and termination construction.

规格参数表 Specification Table

产品代号 Model No.	标称截面 Nominal Section (mm^2)	对应规格 AWG Size	导体结构 Conductor Stranding	绝缘壁厚 Insulation Thickness	护套壁厚 Jacket Thickness	成品外径 Finished OD	标称重量 Nominal Weight	载流量 Ampacity
BC-SJT -3C-18	0.82	18 AWG	16/0.25	0.5	0.6	6.4	49	10
BC-SJT -3C-16	1.3	16 AWG	16/0.32	0.6	0.7	7.8	74	13
BC-SJT -3C-14	2.0	14 AWG	16/0.40	0.7	0.8	9.4	109	15
BC-SJT -3C-12	3.5	12 AWG	16/0.50	0.8	0.9	11.2	169	20
BC-SJT -3C-10	5.5	10 AWG	16/0.64	1.0	1.0	14.0	259	25
BC-SJT -3C-8	8.0	8 AWG	16/0.81	1.2	1.2	17.2	381	35
BC-SJT -3C-6	14	6 AWG	19/0.98	1.4	1.4	20.5	607	50

灯具配线

600V TF Fixture Wire



用途 Application

用于照明灯具、家用电器内部的布线连接，适配 600V 及以下、长期工作温度不超过 60℃的干湿环境内部配线场景

Used for internal wiring connection of lighting fixtures and household appliances, suitable for internal wiring scenarios in dry and wet environments with 600V and below and long-term operating temperature not exceeding 60℃.

结构 Construction

导体为实心或多股绞合软铜导体，外层挤包无铅阻燃聚氯乙烯（PVC）绝缘层；分为单芯与双芯对绞两种结构，颜色标识清晰

Conductor is solid or stranded soft copper conductor, with lead-free flame-retardant polyvinyl chloride (PVC) insulation layer extruded on the outer layer. Available in single-core and twin-core twisted pair structures with clear color identification.

产品特性 Product Feature

聚氯乙烯（PVC）绝缘阻燃、防潮、电气性能稳定可靠；线体柔软易加工，适配灯具内部狭小空间布线；绝缘颜色齐全，便于回路区分与施工端接

polyvinyl chloride (PVC) insulation is flame-retardant, moisture-proof and has stable electrical performance. Soft wire body is easy to process, adapting to wiring in narrow space inside lamps. Complete insulation colors, convenient for circuit distinction and construction termination.

规格参数表 Specification Table

产品代号 Model No.	标称截面 Nominal Section (mm²)	对应规格 AWG	导体结构 Conductor Stranding	绝缘壁厚 Insulation Thickness	成品外径 Finished OD (mm)	标称重量 Nominal Weight	20℃最大直流电阻 Max DC Resistance @20℃ (Ω/km)
BC-TF -1C-20	0.5	20 AWG	1/0.80	0.8	2.4	10	36.0
BC-TF -1C-18	0.75	18 AWG	1/0.98	0.8	2.6	14	24.5
BC-TF -1C-17	1.0	17 AWG	1/1.13	0.8	2.7	18	18.1
BC-TF -1C-16	1.5	16 AWG	1/1.38	0.8	3.0	26	12.1
BC-TF -1C-14	2.0	14 AWG	1/1.60	0.8	3.2	31	9.0
BC-TF -1C-12	3.5	12 AWG	1/2.00	0.8	3.6	51	5.2
BC-TF -1C-10	5.5	10 AWG	7/1.00	0.8	4.4	81	3.3
BC-TF -2C-20	0.5	20 AWG	1/0.80	0.8	4.8	21	36.0
BC-TF -2C-18	0.75	18 AWG	1/0.98	0.8	5.2	29	24.5
BC-TF -2C-17	1.0	17 AWG	1/1.13	0.8	5.5	38	18.1
BC-TF -2C-16	1.5	16 AWG	1/1.38	0.8	6.0	55	12.1
BC-TF -2C-14	2.0	14 AWG	1/1.60	0.8	6.4	65	9.0
BC-TF -2C-12	3.5	12 AWG	1/2.00	0.8	7.2	107	5.2
BC-TF -2C-10	5.5	10 AWG	7/1.00	0.8	8.8	170	3.3

安装用软铜绞线

600V Flexible Stranded Copper Hook-up Wire



用途 Application

用于配电箱、开关柜、照明灯具、弱电设备的内部连接布线，也可作为低压信号回路连接线，适配 600V 及以下固定安装场景

Used for internal connection wiring of distribution boxes, switch cabinets, lighting fixtures and weak current equipment, also used as connection wire for low-voltage signal circuits, suitable for fixed installation scenarios of 600V and below.

结构 Construction

导体为多股绞合退火软铜，外层均匀挤包聚氯乙烯（PVC）绝缘层；绝缘颜色丰富，线径均匀一致

Conductor is multi-strand annealed soft copper, with uniformly extruded polyvinyl chloride (PVC) insulation layer on the outer layer. Rich insulation colors with uniform wire diameter.

产品特性 Product Feature

线体柔软纤细，便于狭小空间弯折与端接；聚氯乙烯（PVC）绝缘电气性能稳定可靠，阻燃防潮；绝缘颜色齐全，便于回路编号与功能区分

Soft and slim wire body, convenient for bending and termination in narrow spaces. polyvinyl chloride (PVC) insulation has stable electrical performance, flame retardant and moisture-proof. Complete insulation colors, convenient for circuit numbering and function distinction.

规格参数表 Specification Table

产品代号 Model No.	标称截面 Nominal Section (mm^2)	对应规格 AWG	导体结构 Conductor Stranding	绝缘壁厚 Insulation Thickness	成品外径 Finished OD (mm)	标称重量 Nominal Weight (kg/km)	额定电压 Rated Voltage	20℃最大直流电阻 Max DC Resistance @20℃ (Ω/km)
BC-HOOKUP -1C-14 ($2.0mm^2$)	2.0	14 AWG	16/0.40	0.6	3.2	25	15	8.80
BC-HOOKUP -1C-12 ($3.5mm^2$)	3.5	12 AWG	16/0.52	0.7	4.0	41	20	5.00
BC-HOOKUP -1C-10 ($5.5mm^2$)	5.5	10 AWG	16/0.66	0.8	4.9	63	30	3.20
BC-HOOKUP -1C-08 ($8.0mm^2$)	8.0	8 AWG	16/0.80	0.9	5.8	91	40	2.20
BC-HOOKUP -1C-06 ($14mm^2$)	14	6 AWG	30/0.80	1.0	9.2	161	55	1.30

非金属护套住宅布线电缆

600V NM-B Non-Metallic Sheathed Residential Cable



用途 Application

专为住宅、轻型商业建筑的室内干燥环境设计，用于照明、插座、普通动力回路的固定暗装敷设，是民用建筑配电的主流布线产品

Specially designed for indoor dry environments of residential and light commercial buildings, used for fixed concealed laying of lighting, socket and general power circuits. It is the mainstream wiring product for civil building power distribution.

结构 Construction

包含多根绝缘相线 + 1 根裸铜接地极，线芯平行排列后整体挤包阻燃聚氯乙烯非金属护套；相线颜色标识清晰，接地极为裸铜结构

Contains multiple insulated phase wires + 1 bare copper grounding conductor. Cores are arranged in parallel and integrally extruded with flame-retardant PVC non-metallic sheath. Phase wires have clear color identification, and the grounding conductor is bare copper structure.

产品特性 Product Feature

集成接地极，施工无需单独布设地线，大幅提升布线效率；护套阻燃防潮，适配墙体暗装、吊顶敷设；线体扁平易弯折，穿管与转角施工便捷

Integrated grounding conductor eliminates the need for separate grounding wire during construction, greatly improving wiring efficiency. Flame-retardant and moisture-proof sheath, suitable for wall concealed installation and ceiling laying. Flat and flexible cable body, convenient for conduit laying and corner construction.

规格参数表 Specification Table

产品代号 Model No.	标称截面 Nominal Section (mm²)	对应规格 AWG Size	导体结构 Conductor Stranding	绝缘壁厚 Insulation Thickness	护套壁厚 Sheath Thickness	成品尺寸 (宽×厚) Finished Size (W×T)	标称重量 Nominal Weight	载流量 Ampacity
BC-NMB -2C-14	2.0	14 AWG	7/0.60	0.8	0.8	10.1	131	15
BC-NMB -2C-12	3.5	12 AWG	7/0.80	0.8	0.9	11.8	195	20
BC-NMB -2C-10	5.5	10 AWG	7/1.00	1.0	1.0	14.5	298	30
BC-NMB -2C-8	8.0	8 AWG	7/1.20	1.2	1.1	17.2	423	40
BC-NMB -2C-6	14	6 AWG	7/1.60	1.2	1.2	20.4	650	55
BC-NMB -2C-4	22	4 AWG	7/2.00	1.4	1.4	24.8	988	70

金属铠装住宅布线电缆

600V AC/BX Armored Residential Cable



用途 Application

用于商业建筑、工业厂房的明装布线与防火要求较高的场景，可替代穿管布线直接敷设，也适用于吊顶、墙体等易受机械损伤的布线环境

Used for exposed wiring and high fire protection scenarios in commercial buildings and industrial plants. Can replace conduit wiring for direct laying, also suitable for wiring environments vulnerable to mechanical damage such as ceilings and walls.

结构 Construction

内部为多根 PVC 绝缘铜芯线，外层螺旋缠绕镀锌钢带铠装；金属铠装同时具备机械防护与接地通路功能，无需单独布设接地线

Inside contains multiple PVC insulated copper cores, with galvanized steel tape armor spirally wound on the outer layer. The metal armor provides both mechanical protection and grounding path, no separate grounding wire required.

产品特性 Product Feature

钢带铠装抗挤压、抗冲击，机械防护性能优异；铠装可直接作为接地导体，施工省去穿管工序，安装效率大幅提升；防火性能优于普通非金属护套电缆

Steel tape armor is resistant to extrusion and impact with excellent mechanical protection. The armor can be directly used as grounding conductor, eliminating conduit process and greatly improving installation efficiency. Better fire performance than ordinary non-metallic sheathed cables.

规格参数表 Specification Table

产品代号 Model No.	标称截面 Nominal Section (mm²)	对应规格 AWG Size	导体结构 Conductor Stranding	绝缘壁厚 Insulation Thickness	成品外径 Finished OD	标称重量 Nominal Weight	载流量 Ampacity
BC-AC -2C-14	2.0	14 AWG	7/0.60	0.8	9.9	129	15
BC-AC -2C-12	3.5	12 AWG	7/0.80	0.8	11.4	182	20
BC-AC -2C-10	5.5	10 AWG	7/1.00	1.0	13.9	267	30
BC-AC -2C-8	8.0	8 AWG	7/1.20	1.2	16.4	369	40
BC-AC -2C-6	14	6 AWG	7/1.60	1.2	19.6	611	55
BC-AC -2C-4	22	4 AWG	7/2.00	1.4	23.6	896	70

服务入口电缆

600V SER/SEU Service Entrance Cable



用途 Application

用作建筑总进线电缆，连接户外电表与室内主配电盘，适配架空进线与管道进线场景，是住宅、商业建筑配电入口的标准选型

Used as the main building entrance cable, connecting the outdoor electric meter and the indoor main distribution panel. Suitable for overhead and conduit entrance scenarios, it is the standard selection for power entrance of residential and commercial buildings.

结构 Construction

相线为绞合铜导体并独立挤包 PVC 绝缘，搭配裸铜中性线 / 接地线，线芯平行排列后整体挤包耐磨阻燃 PVC 外护套；分为扁形多芯与 U 型中性线两种结构

Phase conductors are stranded copper with independent polyvinyl chloride (PVC) insulation, matched with bare copper neutral/grounding conductor. Cores are arranged in parallel and integrally extruded with wear-resistant flame-retardant PVC outer sheath. Available in flat multi-core and U-shape neutral structures.

产品特性 Product Feature

集成相线、中性线与接地极，单根即可完成建筑主进线敷设，施工效率高；外护套耐磨、防潮、阻燃，适配户外与管道内恶劣环境；载流量充足，适配单相、三相入户配电需求

Integrated phase wires, neutral wire and grounding electrode, a single cable can complete the main building entrance wiring with high construction efficiency. The outer sheath is wear-resistant, moisture-proof and flame-retardant, adapting to harsh outdoor and in-conduit environments. Sufficient ampacity meets single-phase and three-phase entrance power distribution requirements.

规格参数表 Specification Table

产品代号 Model No.	标称截面 Nominal Section (mm²)	对应规格 AWG Size	导体结构 Conductor Stranding	绝缘壁厚 Insulation Thickness	成品尺寸 (宽×厚) Finished Size (W×T)	标称重量 Nominal Weight	载流量 Ampacity
BC-SER -4C-8	8.0	8 AWG	7/1.20	1.14	19.5	527	50
BC-SER -4C-6	14	6 AWG	7/1.60	1.14	23.0	815	65
BC-SER -4C-4	22	4 AWG	7/2.00	1.14	26.8	1195	85
BC-SER -4C-2	30	2 AWG	7/2.30	1.40	31.2	1624	115
BC-SER -4C-1	38	1 AWG	19/1.60	1.40	34.6	2023	130

600V NM-B Non-Metallic Sheathed Residential Cable
600V AC/BX Armored Residential Cable
600V SER/SEU Service Entrance Cable
600V UF-B Underground Feeder Cable

地下馈线电缆

600V UF-B Underground Feeder Cable



用途 Application

专为户外潮湿、直埋地下场景设计，用于庭院照明、户外插座、景观供电、附属建筑配电，可直接埋入土壤或混凝土中敷设

Specially designed for outdoor humid and direct burial scenarios. Used for garden lighting, outdoor sockets, landscape power supply and ancillary building power distribution, can be directly buried in soil or concrete.

结构 Construction

导体为实心或绞合铜导体，每芯独立挤包耐水 PVC 绝缘，集成裸铜接地极，线芯平行排列后整体挤包高密度防水 PVC 外护套；护套致密性高，防土壤渗透

Conductor is solid or stranded copper. Each core is independently extruded with water-resistant polyvinyl chloride (PVC) insulation, integrated with bare copper grounding electrode. Cores are arranged in parallel and integrally extruded with high-density waterproof PVC outer sheath. The dense sheath prevents soil penetration.

产品特性 Product Feature

防水防潮性能优异，支持长期直埋地下运行；耐土壤腐蚀、耐紫外线，户外露天段也可正常使用；自带接地极，施工无需单独布地线，适配户外工程快速敷设

Excellent waterproof and moisture-proof performance, supporting long-term direct burial operation. Resistant to soil corrosion and UV radiation, also suitable for outdoor exposed sections. Built-in grounding electrode eliminates separate grounding wire, suitable for fast outdoor construction.

规格参数表 Specification Table

产品代号 Model No.	标称截面 Nominal Section (mm²)	对应规格 AWG Size	导体结构 Conductor Stranding	绝缘壁厚 Insulation Thickness	成品尺寸 (宽×厚) Finished Size (W×T)	标称重量 Nominal Weight	载流量 Ampacity
BC-UFB -2C-14	2.0	14 AWG	7/0.60	0.8	10.9	150	15
BC-UFB -2C-12	3.5	12 AWG	7/0.80	0.8	12.4	211	20
BC-UFB -2C-10	5.5	10 AWG	7/1.00	1.0	15.3	324	30
BC-UFB -2C-8	8.0	8 AWG	7/1.20	1.2	18.0	454	40
BC-UFB -2C-6	14	6 AWG	7/1.60	1.2	21.2	687	55
BC-UFB -2C-4	22	4 AWG	7/2.00	1.4	25.6	1032	70

多芯控制电缆

600V TC Multi-Core Control Cable



用途 Application

用于工业变频设备、楼宇自控系统、消防信号回路、传感器与仪表接线，适用于建筑、工业配电等一般控制回路，保障控制信号传输稳定

Used for industrial variable frequency equipment, building automation systems, fire signal circuits, sensor and instrument wiring. Suitable for building and industrial power distribution environments with electromagnetic interference, ensuring stable control signal transmission.

结构 Construction

导体为多股绞合软铜，每芯独立挤包 PVC 绝缘并分色标识；成缆后增设铜带总屏蔽层，外层挤包阻燃 PVC 外护套；接地后可有效抵御外界电磁干扰

Conductor is multi-strand annealed soft copper. Each core is independently extruded with polyvinyl chloride (PVC) insulation with color identification. Copper tape overall shield layer is added after cabling, outer layer is extruded with flame-retardant PVC sheath. Grounded shield layer can effectively resist external electromagnetic interference.

产品特性 Product Feature

铜带屏蔽抗电磁干扰能力强，避免动力回路对控制信号的影响；线缆柔软，易于弯曲敷设，适配桥架、管道等多种敷设方式；绝缘护套阻燃防潮，电气性能稳定可靠

Copper tape shield has strong anti-electromagnetic interference ability, avoiding the influence of power circuits on control signals. Soft and flexible cable body, suitable for various laying methods such as cable tray and conduit. Flame-retardant and moisture-proof insulation and sheath with stable electrical performance.

规格参数表 Specification Table

产品代号 Model No.	芯数 No. of Cores	标称截面 Nominal Section (mm^2)	导体结构 Conductor Structure	绝缘厚度 Insulation Thickness (mm)	护套厚度 Sheath Thickness (mm)	成品外径 Finished OD (mm)	标称重量 Nominal Weight(kg/km)	额定电压 Rated Voltage	20℃最大直流电阻 Max DC Resistance @20℃ (Ω/km)
BC-TC-2C-0.5	2	0.5	16/0.20	0.5	1.2	6.4	43.0	600V	36.0
BC-TC-2C-0.75	2	0.75	24/0.20	0.5	1.2	7.2	53.0	600V	24.5
BC-TC-2C-1.0	2	1.0	32/0.20	0.6	1.2	9.2	75.0	600V	18.1
BC-TC-2C-1.5	2	1.5	30/0.25	0.6	1.2	9.3	84.0	600V	12.1
BC-TC-2C-2.5	2	2.5	50/0.25	0.7	1.4	14.1	153	600V	7.41
BC-TC-2C-4	2	4	56/0.30	0.8	1.4	17.4	215	600V	4.61
BC-TC-2C-6	2	6	84/0.30	0.8	1.4	22.2	297	600V	3.08
BC-TC-2C-10	2	10	84/0.40	1.0	1.6	28.8	473	600V	1.83
BC-TC-3C-0.5	3	0.5	16/0.20	0.5	1.2	6.8	53.0	600V	36.0
BC-TC-3C-0.75	3	0.75	24/0.20	0.5	1.2	7.7	67.0	600V	24.5
BC-TC-3C-1.0	3	1.0	32/0.20	0.6	1.2	9.9	95.0	600V	18.1
BC-TC-3C-1.5	3	1.5	30/0.25	0.6	1.2	10.0	109	600V	12.1
BC-TC-3C-2.5	3	2.5	50/0.25	0.7	1.4	15.2	198	600V	7.41
BC-TC-3C-4	3	4	56/0.30	0.8	1.4	18.9	283	600V	4.61
BC-TC-3C-6	3	6	84/0.30	0.8	1.4	24.1	394	600V	3.08
BC-TC-3C-10	3	10	84/0.40	1.0	1.6	31.4	632	600V	1.83
BC-TC-4C-0.5	4	0.5	16/0.20	0.5	1.2	7.4	64.0	600V	36.0
BC-TC-4C-0.75	4	0.75	24/0.20	0.5	1.2	8.4	81.0	600V	24.5
BC-TC-4C-1.0	4	1.0	32/0.20	0.6	1.2	10.9	116	600V	18.1
BC-TC-4C-1.5	4	1.5	30/0.25	0.6	1.2	11.0	135	600V	12.1
BC-TC-4C-2.5	4	2.5	50/0.25	0.7	1.4	16.9	245	600V	7.41
BC-TC-4C-4	4	4	56/0.30	0.8	1.4	21.1	355	600V	4.61
BC-TC-4C-6	4	6	84/0.30	0.8	1.4	27.1	497	600V	3.08

VOLINIX

规格参数表 Specification Table

产品代号 Model No.	芯数 No. of Cores	标称截面 Nominal Section (mm²)	导体结构 Conductor Structure	绝缘厚度 Insulation Thickness (mm)	护套厚度 Sheath Thickness (mm)	成品外径 Finished OD (mm)	标称重量 Nominal Weight(kg/km)	额定电压 Rated Voltage	20℃最大直流电阻 Max DC Resistance @20℃ (Ω/km)
BC-TC-4 C-10	4	10	84/0.40	1.0	1.6	35.2	800	600V	1.83
BC-TC-5 C-0.5	5	0.5	16/0.20	0.5	1.2	8.4	77.0	600V	36.0
BC-TC-5 C-0.5	5	0.75	24/0.20	0.5	1.2	9.6	99.0	600V	24.5
BC-TC-5 C-1.0	5	1.0	32/0.20	0.6	1.2	12.6	142	600V	18.1
BC-TC-5 C-1.5	5	1.5	30/0.25	0.6	1.2	12.8	165	600V	12.1
BC-TC-5 C-2.5	5	2.5	50/0.25	0.7	1.4	19.8	300	600V	7.41
BC-TC-5 C-4	5	4	56/0.30	0.8	1.4	24.7	436	600V	4.61
BC-TC-5 C-6	5	6	84/0.30	0.8	1.6	31.9	611	600V	3.08
BC-TC-5 C-10	5	10	84/0.40	1.0	1.6	41.6	985	600V	1.83
BC-TC-7 C-0.5	7	0.5	16/0.20	0.5	1.2	8.4	92.0	600V	36.0
BC-TC-7 C-0.75	7	0.75	24/0.20	0.5	1.2	9.6	120	600V	24.5
BC-TC-7 C-1.0	7	1.0	32/0.20	0.6	1.2	12.6	174	600V	18.1
BC-TC-7 C-1.5	7	1.5	30/0.25	0.6	1.2	12.8	207	600V	12.1
BC-TC-7 C-2.5	7	2.5	50/0.25	0.7	1.4	19.8	375	600V	7.41
BC-TC-7 C-4	7	4	56/0.30	0.8	1.4	24.7	552	600V	4.61
BC-TC-7 C-6	7	6	84/0.30	0.8	1.4	31.9	780	600V	3.08
BC-TC-7 C-10	7	10	84/0.40	1.0	1.6	41.6	1267	600V	1.83
BC-TC-8 C-0.5	8	0.5	16/0.20	0.5	1.4	10.8	120	600V	36.0
BC-TC-8 C-0.75	8	0.75	24/0.20	0.5	1.4	12.4	154	600V	24.5
BC-TC-8 C-1.0	8	1.0	32/0.20	0.6	1.4	16.4	223	600V	18.1
BC-TC-8 C-1.5	8	1.5	30/0.25	0.6	1.4	16.6	260	600V	12.1
BC-TC-8 C-2.5	8	2.5	50/0.25	0.7	1.6	25.8	470	600V	7.41
BC-TC-8 C-4	8	6	56/0.30	0.8	1.6	32.4	684	600V	4.61

规格参数表 Specification Table

产品代号 Model No.	芯数 No. of Cores	标称截面 Nominal Section (mm²)	导体结构 Conductor Structure	绝缘厚度 Insulation Thickness (mm)	护套厚度 Sheath Thickness (mm)	成品外径 Finished OD (mm)	标称重量 Nominal Weight(kg/km)	额定电压 Rated Voltage	20℃最大直流电阻 Max DC Resistance @20℃ (Ω/km)
BC-TC-8 C-6	8	6	84/0.30	0.8	1.6	42.0	962	600V	3.08
BC-TC-8 C-10	8	10	84/0.40	1.0	1.8	54.8	1546	600V	1.83
BC-TC-10C-0.5	10	0.5	16/0.20	0.5	1.4	10.8	135	600V	36.0
BC-TC-10 C-0.75	10	0.75	24/0.20	0.5	1.4	12.4	176	600V	24.5
BC-TC-10 C-1.0	10	1.0	32/0.20	0.6	1.4	16.4	255	600V	18.1
BC-TC-10 C-1.5	10	1.5	30/0.25	0.6	1.4	16.6	302	600V	12.1
BC-TC-10 C-2.5	10	2.5	50/0.25	0.7	1.6	25.8	545	600V	7.41
BC-TC-10 C-4	10	4	56/0.30	0.8	1.6	32.4	801	600V	4.61
BC-TC-10 C-6	10	6	84/0.30	0.8	1.6	42.0	1131	600V	3.08
BC-TC-10 C-10	10	0.75	84/0.40	1.0	1.8	54.8	1828	600V	1.83
BC-TC-12 C-0.5	12	0.5	16/0.20	0.5	1.4	10.8	151	600V	36.0
BC-TC-12 C-0.75	12	0.75	24/0.20	0.5	1.4	12.4	198	600V	24.5
BC-TC-12 C-1.0	12	1.0	32/0.20	0.6	1.4	16.4	288	600V	18.1
BC-TC-12 C-1.5	12	1.5	30/0.25	0.6	1.4	16.6	344	600V	12.1
BC-TC-12 C-2.5	12	2.5	50/0.25	0.7	1.4	25.8	620	600V	7.41
BC-TC-12 C-4	12	4	56/0.30	0.8	1.6	32.4	918	600V	4.61
BC-TC-12 C-6	12	6	84/0.30	0.8	1.2	42.0	1300	600V	3.08
BC-TC-12 C-10	12	10	84/0.40	1.0	1.8	54.8	2109	600V	1.83
BC-TC-14 C-0.5	14	0.5	16/0.20	0.5	1.4	12.8	179	600V	36.0
BC-TC-14 C-0.75	14	0.75	24/0.20	0.5	1.4	14.8	234	600V	24.5
BC-TC-14 C-1.0	14	1.0	32/0.20	0.6	1.4	19.8	341	600V	18.1
BC-TC-14 C-1.5	14	1.5	30/0.25	0.6	1.4	20.1	407	600V	12.1
BC-TC-14 C-2.5	14	2.5	50/0.25	0.7	1.6	31.4	735	600V	7.41

VOLINIX

规格参数表 Specification Table

产品代号 Model No.	芯数 No. of Cores	标称截面 Nominal Section (mm²)	导体结构 Conductor Structure	绝缘厚度 Insulation Thickness (mm)	护套厚度 Sheath Thickness (mm)	成品外径 Finished OD (mm)	标称重量 Nominal Weight(kg/km)	额定电压 Rated Voltage	20℃最大直流电阻 Max DC Resistance @20℃ (Ω/km)
BC-TC-14 C-4	14	4	56/0.30	0.8	1.6	39.7	1086	600V	4.61
BC-TC-14 C-6	14	6	84/0.30	0.8	1.6	51.7	1538	600V	3.08
BC-TC-14 C-10	14	10	84/0.40	1.0	1.8	67.6	2492	600V	1.83
BC-TC-16 C-0.5	16	0.5	16/0.20	0.5	1.4	12.8	194	600V	36.0
BC-TC-16 C-0.75	16	0.75	24/0.20	0.5	1.4	14.8	256	600V	24.5
BC-TC-16 C-1.0	16	1.0	32/0.20	0.6	1.4	19.8	374	600V	18.1
BC-TC-16 C-1.5	16	1.5	30/0.25	0.6	1.4	20.1	449	600V	12.1
BC-TC-16 C-2.5	16	2.5	50/0.25	0.7	1.6	31.4	809	600V	7.41
BC-TC-16 C-4	16	4	56/0.30	0.8	1.6	39.7	1203	600V	4.61
BC-TC-16 C-6	16	6	84/0.30	0.8	1.6	51.7	1707	600V	3.08
BC-TC-16 C-10	16	10	84/0.40	1.0	1.8	67.6	2774	600V	1.83
BC-TC-19 C-0.5	19	0.5	16/0.20	0.5	1.4	12.8	217	600V	36.0
BC-TC-19 C-0.75	19	0.75	24/0.20	0.5	1.4	14.8	289	600V	24.5
BC-TC-19 C-1.0	19	1.0	32/0.20	0.6	1.4	19.8	423	600V	18.1
BC-TC-19 C-1.5	19	1.5	30/0.25	0.6	1.4	20.1	511	600V	12.1
BC-TC-19 C-2.5	19	2.5	50/0.25	0.7	1.6	31.4	922	600V	7.41
BC-TC-19 C-4	19	4	56/0.30	0.8	1.6	39.7	1378	600V	4.61
BC-TC-19 C-6	19	6	84/0.30	0.8	1.6	51.7	1961	600V	3.08
BC-TC-19 C-10	19	10	84/0.40	1.0	1.8	67.6	3196	600V	1.83
BC-TC-24 C-0.5	24	0.5	16/0.20	0.5	1.6	15.2	282	600V	36.0
BC-TC-24 C-0.75	24	0.75	24/0.20	0.5	1.6	17.6	373	600V	24.5
BC-TC-24 C-1.0	24	1.0	32/0.20	0.6	1.6	23.6	546	600V	18.1
BC-TC-24 C-1.5	24	1.5	30/0.25	0.6	1.6	23.9	657	600V	12.1

规格参数表 Specification Table

产品代号 Model No.	芯数 No. of Cores	标称截面 Nominal Section (mm²)	导体结构 Conductor Structure	绝缘厚度 Insulation Thickness (mm)	护套厚度 Sheath Thickness (mm)	成品外径 Finished OD (mm)	标称重量 Nominal Weight(kg/km)	额定电压 Rated Voltage	20℃最大直流电阻 Max DC Resistance @20℃ (Ω/km)
BC-TC-24 C-2.5	24	2.5	50/0.25	0.7	1.8	37.5	1182	600V	7.41
BC-TC-24 C-4	24	4	56/0.30	0.8	1.8	47.4	1763	600V	4.61
BC-TC-24 C-6	24	6	84/0.30	0.8	1.8	61.8	2507	600V	3.08
BC-TC-24 C-10	24	10	84/0.40	1.0	2.0	80.8	4072	600V	1.83
BC-TC-30 C-0.5	30	0.5	16/0.20	0.5	1.6	15.2	328	600V	36.0
BC-TC-30 C-0.75	30	0.75	24/0.20	0.5	1.6	17.6	438	600V	24.5
BC-TC-30 C-1.0	30	1.0	32/0.20	0.6	1.6	23.6	643	600V	18.1
BC-TC-30 C-1.5	30	1.5	30/0.25	0.6	1.6	23.9	783	600V	12.1
BC-TC-30 C-2.5	30	2.5	50/0.25	0.7	1.8	37.5	1407	600V	7.41
BC-TC-30 C-4	30	4	56/0.30	0.8	1.8	47.4	2114	600V	4.61
BC-TC-30 C-6	30	6	84/0.30	0.8	1.8	61.8	3015	600V	3.08
BC-TC-30 C-10	30	10	84/0.40	1.0	2.0	80.8	4917	600V	1.83
BC-TC-37 C-0.5	37	0.5	16/0.20	0.5	1.6	17.2	396	600V	36.0
BC-TC-37 C-0.75	37	0.75	24/0.20	0.5	1.6	20.0	531	600V	24.5
BC-TC-37 C-1.0	37	1.0	24/0.20	0.6	1.6	27.0	781	600V	18.1
BC-TC-37 C-1.5	37	1.5	30/0.25	0.6	1.6	27.4	953	600V	12.1
BC-TC-37 C-2.5	37	2.5	50/0.25	0.7	1.8	43.2	1714	600V	7.41
BC-TC-37 C-4	37	4	56/0.30	0.8	1.8	54.7	2581	600V	4.61
BC-TC-37 C-6	37	6	84/0.30	0.8	1.8	71.5	3684	600V	3.08
BC-TC-37 C-10	37	10	84/0.40	1.0	2.0	93.6	6015	600V	1.83

屏蔽型控制电缆

600V Shielded Control Cable

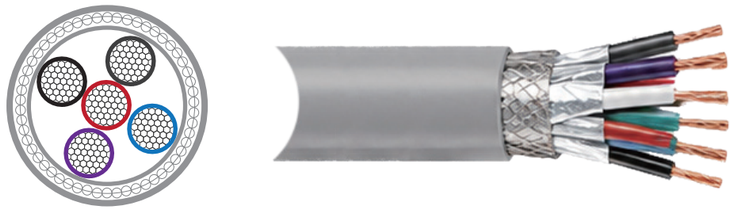

用途 Application

用于工业变频设备、楼宇自控系统、消防信号回路、传感器与仪表接线，适配存在电磁干扰的建筑与工业配电环境，保障控制信号传输稳定

Used for industrial variable frequency equipment, building automation systems, fire signal circuits, sensor and instrument wiring. Suitable for building and industrial power distribution environments with electromagnetic interference, ensuring stable control signal transmission.

结构 Construction

导体为多股绞合软铜，每芯独立挤包 PVC 绝缘并分色标识；成缆后增设铜带总屏蔽层，外层挤包阻燃 PVC 外护套；屏蔽层接地后可有效抵御外界电磁干扰

Conductor is multi-strand annealed soft copper. Each core is independently extruded with polyvinyl chloride (PVC) insulation with color identification. Copper tape overall shield layer is added after cabling, outer layer is extruded with flame-retardant PVC sheath. Grounded shield layer can effectively resist external electromagnetic interference.

产品特性 Product Feature

铜带屏蔽抗电磁干扰能力强，避免动力回路对控制信号的影响；线缆柔软，易于弯曲敷设，适配桥架、管道等多种敷设方式；绝缘护套阻燃防潮，电气性能稳定可靠

Copper tape shield has strong anti-electromagnetic interference ability, avoiding the influence of power circuits on control signals. Soft and flexible cable body, suitable for various laying methods such as cable tray and conduit. Flame-retardant and moisture-proof insulation and sheath with stable electrical performance.

规格参数表 Specification Table

产品代号 Model No.	芯数 No. of Cores	标称截面 Nominal Section (mm^2)	导体结构 Conductor Structure	绝缘厚度 Insulation Thickness (mm)	护套厚度 Sheath Thickness (mm)	成品外径 Finished OD (mm)	标称重量 Nominal Weight(kg/km)	额定电压 Rated Voltage	20℃最大直流电阻 Max DC Resistance @20℃ (Ω/km)
BC-TC-S-2C-0.5	2	0.5	16/0.20	0.5	1.3	6.8	56.0	600V	36.0
BC-TC-S-2C-0.75	2	0.75	24/0.20	0.5	1.3	7.6	69.0	600V	24.5
BC-TC-S-2C-1.0	2	1.0	32/0.20	0.6	1.3	9.6	95.0	600V	18.1
BC-TC-S-2C-1.5	2	1.5	30/0.25	0.6	1.3	9.7	105	600V	12.1
BC-TC-S-2C-2.5	2	2.5	50/0.25	0.7	1.5	14.5	186	600V	7.41
BC-TC-S-2C-4	2	4	56/0.30	0.8	1.5	17.8	257	600V	4.61
BC-TC-S-2C-6	2	6	84/0.30	0.8	1.5	22.6	352	600V	3.08
BC-TC-S-2C-10	2	10	84/0.40	1.0	1.7	29.2	545	600V	1.83
BC-TC-S-3C-0.5	3	0.5	16/0.20	0.5	1.3	7.2	67.0	600V	36.0
BC-TC-S-3C-0.75	3	0.75	24/0.20	0.5	1.3	8.1	83.0	600V	24.5
BC-TC-S-3C-1.0	3	1.0	32/0.20	0.6	1.3	10.3	117	600V	18.1
BC-TC-S-3C-1.5	3	1.5	30/0.25	0.6	1.3	10.4	132	600V	12.1
BC-TC-S-3C-2.5	3	2.5	50/0.25	0.7	1.5	15.6	234	600V	7.41
BC-TC-S-3C-4	3	4	56/0.30	0.8	1.5	19.3	329	600V	4.61
BC-TC-S-3C-6	3	6	84/0.30	0.8	1.5	24.5	454	600V	3.08
BC-TC-S-3C-10	3	10	84/0.40	1.0	1.7	31.8	632	600V	1.83
BC-TC-S-4C-0.5	4	0.5	16/0.20	0.5	1.3	7.8	64.0	600V	36.0
BC-TC-S-4C-0.75	4	0.75	24/0.20	0.5	1.3	8.8	81.0	600V	24.5
BC-TC-S-4C-1.0	4	1.0	32/0.20	0.6	1.3	11.3	142	600V	18.1
BC-TC-S-4C-1.5	4	1.5	30/0.25	0.6	1.3	11.4	161	600V	12.1
BC-TC-S-4C-2.5	4	2.5	50/0.25	0.7	1.5	17.3	286	600V	7.41
BC-TC-S-4C-4	4	4	56/0.30	0.8	1.5	21.4	406	600V	4.61
BC-TC-S-4C-6	4	6	84/0.30	0.8	1.5	27.4	564	600V	3.08

VOLINIX

规格参数表 Specification Table

产品代号 Model No.	芯数 No. of Cores	标称截面 Nominal Section (mm²)	导体结构 Conductor Structure	绝缘厚度 Insulation Thickness (mm)	护套厚度 Sheath Thickness (mm)	成品外径 Finished OD (mm)	标称重量 Nominal Weight(kg/km)	额定电压 Rated Voltage	20℃最大直流电阻 Max DC Resistance @20℃ (Ω/km)
BC-TC-S-4C-10	4	10	84/0.40	1.0	1.7	35.6	888	600V	1.83
BC-TC-S-5C-0.5	5	0.5	16/0.20	0.5	1.3	8.8	564	600V	36.0
BC-TC-S-5C-0.75	5	0.75	24/0.20	0.5	1.3	10.0	120	600V	24.5
BC-TC-S-5C-1.0	5	1.0	32/0.20	0.6	1.3	13.0	171	600V	18.1
BC-TC-S-5C-1.5	5	1.5	30/0.25	0.6	1.3	13.2	195	600V	12.1
BC-TC-S-5C-2.5	5	2.5	50/0.25	0.7	1.5	20.2	348	600V	7.41
BC-TC-S-5C-4	5	4	56/0.30	0.8	1.4	25.1	497	600V	4.61
BC-TC-S-5C-6	5	6	84/0.30	0.8	1.6	32.3	692	600V	3.08
BC-TC-S-5C-10	5	10	84/0.40	1.0	1.7	42.0	1091	600V	1.83
BC-TC-S-7C-0.5	7	0.5	16/0.20	0.5	1.3	8.8	111	600V	36.0
BC-TC-S-7C-0.75	7	0.75	24/0.20	0.5	1.3	10.0	142	600V	24.5
BC-TC-S-7C-1.0	7	1.0	32/0.20	0.6	1.3	13.0	204	600V	18.1
BC-TC-S-7C-1.5	7	1.5	30/0.25	0.6	1.3	13.2	237	600V	12.1
BC-TC-S-7C-2.5	7	2.5	50/0.25	0.7	1.5	20.2	423	600V	7.41
BC-TC-S-7C-4	7	4	56/0.30	0.8	1.5	25.1	614	600V	4.61
BC-TC-S-7C-6	7	6	84/0.30	0.8	1.5	32.3	861	600V	3.08
BC-TC-S-7C-10	7	10	84/0.40	1.0	1.7	42.0	1373	600V	1.83
BC-TC-S-8C-0.5	8	0.5	16/0.20	0.5	1.5	11.2	144	600V	36.0
BC-TC-S-8C-0.75	8	0.75	24/0.20	0.5	1.5	12.8	183	600V	24.5
BC-TC-S-8C-1.0	8	1.0	32/0.20	0.6	1.5	16.8	262	600V	18.1
BC-TC-S-8C-1.5	8	1.5	30/0.25	0.6	1.5	17.0	300	600V	12.1
BC-TC-S-8C-2.5	8	2.5	50/0.25	0.7	1.7	26.2	534	600V	7.41
BC-TC-S-8C-4	8	4	56/0.30	0.8	1.7	32.8	765	600V	4.61

规格参数表 Specification Table

产品代号 Model No.	芯数 No. of Cores	标称截面 Nominal Section (mm²)	导体结构 Conductor Structure	绝缘厚度 Insulation Thickness (mm)	护套厚度 Sheath Thickness (mm)	成品外径 Finished OD (mm)	标称重量 Nominal Weight(kg/km)	额定电压 Rated Voltage	20℃最大直流电阻 Max DC Resistance @20℃ (Ω/km)
BC-TC-S-8C-6	8	6	84/0.30	0.8	1.7	42.4	1068	600V	3.08
BC-TC-S-8C-10	8	10	84/0.40	1.0	1.9	55.2	1686	600V	1.83
BC-TC-S-10C-0.5	10	0.5	16/0.20	0.5	1.5	11.2	160	600V	36.0
BC-TC-S-10C-0.75	10	0.75	24/0.20	0.5	1.5	12.8	205	600V	24.5
BC-TC-S-10C-1.0	10	1.0	32/0.20	0.6	1.5	16.8	294	600V	18.1
BC-TC-S-10C-1.5	10	1.5	30/0.25	0.6	1.5	17.0	342	600V	12.1
BC-TC-S-10C-2.5	10	2.5	50/0.25	0.7	1.7	26.2	609	600V	7.41
BC-TC-S-10C-4	10	4	56/0.30	0.8	1.7	32.8	882	600V	4.61
BC-TC-S-10C-6	10	6	84/0.30	0.8	1.7	42.4	1238	600V	3.08
BC-TC-S-10C-10	10	10	84/0.40	1.0	1.9	55.2	1968	600V	1.83
BC-TC-S-12C-0.5	12	0.5	16/0.20	0.5	1.5	11.2	175	600V	36.0
BC-TC-S-12C-0.75	12	0.75	24/0.20	0.5	1.5	12.8	226	600V	24.5
BC-TC-S-12C-1.0	12	1.0	32/0.20	0.6	1.5	16.8	327	600V	18.1
BC-TC-S-12C-1.5	12	1.5	30/0.25	0.6	1.5	17.0	384	600V	12.1
BC-TC-S-12C-2.5	12	2.5	50/0.25	0.7	1.7	26.2	683	600V	7.41
BC-TC-S-12C-4	12	4	56/0.30	0.8	1.7	32.8	999	600V	4.61
BC-TC-S-12C-6	12	6	84/0.30	0.8	1.7	42.4	1407	600V	3.08
BC-TC-S-12C-10	12	10	84/0.40	1.0	1.9	55.2	2250	600V	1.83
BC-TC-S-14C-0.5	14	0.5	16/0.20	0.5	1.5	13.2	208	600V	36.0
BC-TC-S-14C-0.75	14	0.75	24/0.20	0.5	1.5	15.2	269	600V	24.5
BC-TC-S-14C-1.0	14	1.0	32/0.20	0.6	1.5	20.2	389	600V	18.1
BC-TC-S-14C-1.5	14	1.5	30/0.25	0.6	1.5	20.4	456	600V	12.1
BC-TC-S-14C-2.5	14	2.5	50/0.25	0.7	1.7	31.9	813	600V	7.41

VOLINIX

规格参数表 Specification Table

产品代号 Model No.	芯数 No. of Cores	标称截面 Nominal Section (mm²)	导体结构 Conductor Structure	绝缘厚度 Insulation Thickness (mm)	护套厚度 Sheath Thickness (mm)	成品外径 Finished OD (mm)	标称重量 Nominal Weight(kg/km)	额定电压 Rated Voltage	20℃最大直流电阻 Max DC Resistance @20℃ (Ω/km)
BC-TC-14 C-4	14	4	56/0.30	0.8	1.7	40.1	1187	600V	4.61
BC-TC-14 C-6	14	6	84/0.30	0.8	1.7	52.1	1671	600V	3.08
BC-TC-14 C-10	14	10	84/0.40	1.0	1.9	68.0	2667	600V	1.83
BC-TC-16 C-0.5	16	0.5	16/0.20	0.5	1.5	13.2	224	600V	36.0
BC-TC-16 C-0.75	16	0.75	24/0.20	0.5	1.5	15.2	291	600V	24.5
BC-TC-16 C-1.0	16	1.0	32/0.20	0.6	1.5	20.2	422	600V	18.1
BC-TC-16 C-1.5	16	1.5	30/0.25	0.6	1.5	20.4	497	600V	12.1
BC-TC-16 C-2.5	16	2.5	50/0.25	0.7	1.6	31.9	888	600V	7.41
BC-TC-16 C-4	16	4	56/0.30	0.8	1.6	40.1	1304	600V	4.61
BC-TC-16 C-6	16	6	84/0.30	0.8	1.6	52.1	1840	600V	3.08
BC-TC-16 C-10	16	10	84/0.40	1.0	1.9	68.0	2948	600V	1.83
BC-TC-19 C-0.5	19	0.5	16/0.20	0.5	1.5	13.2	247	600V	36.0
BC-TC-19 C-0.75	19	0.75	24/0.20	0.5	1.5	15.2	323	600V	24.5
BC-TC-19 C-1.0	19	1.0	32/0.20	0.6	1.5	20.2	471	600V	18.1
BC-TC-19 C-1.5	19	1.5	30/0.25	0.6	1.5	20.4	560	600V	12.1
BC-TC-19 C-2.5	19	2.5	50/0.25	0.7	1.7	31.9	1001	600V	7.41
BC-TC-19 C-4	19	4	56/0.30	0.8	1.7	40.1	1479	600V	4.61
BC-TC-19 C-6	19	6	84/0.30	0.8	1.7	52.1	2094	600V	3.08
BC-TC-19 C-10	19	10	84/0.40	1.0	1.9	68.0	3371	600V	1.83
BC-TC-24 C-0.5	24	0.5	16/0.20	0.5	1.7	15.6	317	600V	36.0
BC-TC-24 C-0.75	24	0.75	24/0.20	0.5	1.7	18.0	415	600V	24.5
BC-TC-24 C-1.0	24	1.0	32/0.20	0.6	1.7	24.0	603	600V	18.1
BC-TC-24 C-1.5	24	1.5	30/0.25	0.6	1.7	24.3	716	600V	12.1

规格参数表 Specification Table

产品代号 Model No.	芯数 No. of Cores	标称截面 Nominal Section (mm²)	导体结构 Conductor Structure	绝缘厚度 Insulation Thickness (mm)	护套厚度 Sheath Thickness (mm)	成品外径 Finished OD (mm)	标称重量 Nominal Weight(kg/km)	额定电压 Rated Voltage	20℃最大直流电阻 Max DC Resistance @20℃ (Ω/km)
BC-TC-24 C-2.5	24	2.5	50/0.25	0.7	1.9	37.9	1276	600V	7.41
BC-TC-24 C-4	24	4	56/0.30	0.8	1.9	47.8	1884	600V	4.61
BC-TC-24 C-6	24	6	84/0.30	0.8	1.9	62.2	2666	600V	3.08
BC-TC-24 C-10	24	10	84/0.40	1.0	2.1	81.2	4282	600V	1.83
BC-TC-30 C-0.5	30	0.5	16/0.20	0.5	1.7	15.6	363	600V	36.0
BC-TC-30 C-0.75	30	0.75	24/0.20	0.5	1.7	18.0	480	600V	24.5
BC-TC-30 C-1.0	30	1.0	32/0.20	0.6	1.7	24.0	701	600V	18.1
BC-TC-30 C-1.5	30	1.5	30/0.25	0.6	1.7	24.3	841	600V	12.1
BC-TC-30 C-2.5	30	2.5	50/0.25	0.7	1.9	37.9	1501	600V	7.41
BC-TC-30 C-4	30	4	56/0.30	0.8	1.9	47.8	2235	600V	4.61
BC-TC-30 C-6	30	6	84/0.30	0.8	1.9	62.2	3174	600V	3.08
BC-TC-30 C-10	30	10	84/0.40	1.0	2.1	81.2	5126	600V	1.83
BC-TC-37 C-0.5	37	0.5	16/0.20	0.5	1.7	17.6	437	600V	36.0
BC-TC-37 C-0.75	37	0.75	24/0.20	0.5	1.7	20.4	579	600V	24.5
BC-TC-37 C-1.0	37	1.0	24/0.20	0.6	1.7	27.4	848	600V	18.1
BC-TC-37 C-1.5	37	1.5	30/0.25	0.6	1.7	27.8	1021	600V	12.1
BC-TC-37 C-2.5	37	2.5	50/0.25	0.7	1.9	43.6	1823	600V	7.41
BC-TC-37 C-4	37	4	56/0.30	0.8	1.9	55.1	2721	600V	4.61
BC-TC-37 C-6	37	6	84/0.30	0.8	1.9	71.9	3869	600V	3.08
BC-TC-37 C-10	37	10	84/0.40	1.0	2.1	94.0	6259	600V	1.83

耐热防潮橡胶绝缘单芯电力电缆

600V THWN-2 Heat & Moisture Resistant Rubber Insulated Power Cable



用途 Application

用于建筑配电、工业厂房及商业设施的600V及以下电力线路敷设，干湿环境均可使用，长期工作温度不超过90℃，是建筑配电与普通动力配电的通用型电缆

Used for 600V and below power distribution wiring in buildings, industrial plants and commercial facilities, applicable to both dry and wet environments. Long-term operating temperature does not exceed 90°C. It is a general-purpose cable for building and general power distribution.

结构 Construction

导体为无氧软铜导体，B类绞合结构，柔软易敷设；外层挤包交联聚乙烯（XLPE）/乙丙橡胶（EPR）绝缘层，耐热防潮性能优异；最外层为聚氯乙烯（PVC）/尼龙护套，耐磨耐腐

Conductor is annealed stranded copper, Class B stranding, flexible and easy to install. Insulated with cross-linked polyethylene (XLPE) / ethylene propylene rubber (EPR), excellent heat and moisture resistance. Outermost layer is PVC / nylon jacket, wear and corrosion resistant.

芯数规格Core Config

可选芯数：1芯、2芯、3芯、4芯、3+1芯；以单芯为主要规格，可根据配电需求选择不同芯数配置，满足各类建筑与工业配电场景

Available cores: 1-core, 2-core, 3-core, 4-core, 3+1-core. Single core is the main specification, different core configurations can be selected according to distribution requirements, meeting various building and industrial distribution scenarios.

产品特性 Product Feature

XLPE/EPR绝缘耐热、防潮性能优异，电气性能稳定可靠；PVC/尼龙护套耐磨耐腐，机械强度高；载流量大，适配建筑配电与普通动力配电的全场景需求

XLPE/EPR insulation features excellent heat resistance and moisture-proof performance with stable and reliable electrical properties; PVC/nylon sheath boasts good wear and corrosion resistance as well as high mechanical strength. It has a large current-carrying capacity and meets the full-scenario requirements for building power distribution and general power distribution.

规格参数表 Specification Table

产品代号 Model No.	截面 mm^2	AWG/kcmil	导体结构 Constr.	绝缘厚度 Insul. mm	近似外径 Dia. mm	直流电阻 Ω/km	载流量 Amp. A	近似重量 Wt. kg/km
BC-RHW2-1C-20	2.0	14 AWG	7/0.60	1.14	4.32	8.8	25	36
BC-RHW2-1C-35	3.5	12 AWG	7/0.80	1.14	4.83	5.0	30	49
BC-RHW2-1C-55	5.5	10 AWG	7/1.00	1.14	5.33	3.2	40	71
BC-RHW2-1C-80	8.0	8 AWG	7/1.24	1.52	6.86	2.0	55	116
BC-RHW2-1C-14	14	6 AWG	7/1.56	1.52	7.87	1.3	75	170
BC-RHW2-1C-22	22	4 AWG	7/1.96	1.52	9.14	0.8	95	252
BC-RHW2-1C-30	30	2 AWG	7/2.48	1.52	10.67	0.51	130	378
BC-RHW2-1C-38	38	1 AWG	19/1.56	2.03	11.9	0.41	150	475
BC-RHW2-1C-50	50	1/0 AWG	19/1.78	2.03	13.46	0.32	175	598
BC-RHW2-1C-60	60	2/0 AWG	19/2.00	2.03	14.73	0.26	210	744
BC-RHW2-1C-80	80	3/0 AWG	19/2.26	2.03	15.5	0.21	250	920
BC-RHW2-1C-100	100	4/0 AWG	19/2.56	2.03	17.53	0.16	300	1130
BC-RHW2-1C-125	125	250 MCM	37/2.09	2.41	19.56	0.14	345	1347
BC-RHW2-1C-150	150	300 MCM	37/2.29	2.41	20.9	0.12	385	1610
BC-RHW2-1C-200	200	400 MCM	37/2.64	2.41	23.3	0.087	460	2080
BC-RHW2-1C-250	250	500 MCM	37/2.95	2.41	25.4	0.069	530	2572
BC-RHW2-1C-325	325	650 MCM	61/2.62	2.79	28.8	0.054	620	3330
BC-RHW2-1C-400	400	800 MCM	61/2.92	2.79	31.4	0.044	710	4080
BC-RHW2-1C-500	500	1000 MCM	61/3.25	2.79	34.80	0.035	815	5063

金属铠装电力电缆

600V MC Metal Clad Power Cable



用途 Application

用于工业厂房、商业建筑及高层建筑的600V及以下配电系统，可直接敷设或穿管安装，金属铠装提供优异的机械保护，适用于对防护等级要求较高的配电场景

Used for 600V and below power distribution systems in industrial plants, commercial buildings and high-rise buildings. Can be directly installed or laid in conduits. Metal clad provides excellent mechanical protection, suitable for distribution scenarios with high protection level requirements.

结构 Construction

导体为无氧软铜导体，B类绞合结构；绝缘层为交联聚乙烯（XLPE），耐热性能优异；多芯成缆后采用镀锌钢带联锁铠装，提供机械保护；整体结构紧凑，安装便捷

Conductor is annealed stranded copper, Class B stranding. Insulation is cross-linked polyethylene (XLPE) with excellent heat resistance. After multi-core cabling, galvanized steel tape interlocked armor is applied for mechanical protection. Compact structure and convenient installation.

芯数规格Core Config

可选芯数：1芯、2芯、3芯、3+1芯、3+2芯、4芯；以三芯含地线为常用规格，可根据配电需求选择不同芯数配置，满足各类工业与商业建筑配电需求

Available cores: 1-core, 2-core, 3-core, 3+1-core, 3+2-core, 4-core. 3-core with ground is the common specification, different core configurations can be selected according to distribution requirements, meeting various industrial and commercial building distribution needs.

产品特性 Product Feature

金属铠装提供优异的机械保护，抗挤压、抗冲击；XLPE绝缘电气性能稳定可靠，耐热性好；安装灵活，可直接明敷或穿管；适用于各类工业与商业建筑

Metal clad provides excellent mechanical protection against extrusion and impact. cross-linked polyethylene (XLPE) insulation has stable electrical performance and good heat resistance. Flexible installation, can be directly surface-mounted or laid in conduits. Flame retardant performance meets standard requirements, suitable for various industrial and commercial buildings.

规格参数表 Specification Table

产品代号 Model No.	截面 mm^2	AWG/kcmil	导体结构 Constr.	绝缘厚度 Insul. mm	护套厚度 Jacket mm	近似外径 Dia. mm	近似重量 Wt. kg/km	载流量 Amp. A	直流电阻 Ω/km
BC-MC-3C-20	2.0	14 AWG	7/0.60	0.76	1.5	10.3	129	21	8.80
BC-MC-3C-35	3.5	12 AWG	7/0.80	0.76	1.5	11.6	181	25	5.00
BC-MC-3C-55	5.5	10 AWG	7/1.00	0.76	1.6	13.1	253	34	3.20
BC-MC-3C-80	8.0	8 AWG	7/1.21	1.14	1.7	16.4	371	46	2.20
BC-MC-3C-14	14	6 AWG	7/1.60	1.14	1.8	19.1	570	63	1.30
BC-MC-3C-22	22	4 AWG	7/2.00	1.14	1.9	22.0	826	80	0.80
BC-MC-3C-30	30	2 AWG	19/1.42	1.40	2.0	25.8	1113	102	0.60
BC-MC-3C-38	38	1 AWG	19/1.60	1.40	2.1	27.9	1367	119	0.50
BC-MC-3C-50	50	1/0 AWG	19/1.83	1.40	2.1	30.5	1725	140	0.40
BC-MC-3C-60	60	2/0 AWG	19/2.01	1.40	2.2	32.6	2035	157	0.30
BC-MC-3C-80	80	3/0 AWG	19/2.32	1.65	2.3	37.3	2679	187	0.20
BC-MC-3C-100	100	4/0 AWG	19/2.59	1.65	2.4	40.5	3281	212	0.16

桥架外露敷设型电力电缆

600V TC-ER Tray Cable-Exposed Run





用途 Application

用于工业厂房、数据中心及商业设施的600V及以下桥架配电系统，支持外露敷设安装，无需额外穿管保护，适用于电缆桥架集中布线的工业与商业配电场景

Used for 600V and below tray power distribution systems in industrial plants, data centers and commercial facilities. Supports exposed run installation without additional conduit protection. Suitable for industrial and commercial distribution scenarios with cable tray centralized wiring.

结构 Construction

导体为无氧软铜导体，B类绞合结构；绝缘层为交联聚乙烯（XLPE），耐热性能优异；多芯成缆后挤包聚氯乙烯（PVC）外护套，整体防护性能好；结构紧凑，适合桥架敷设

Conductor is annealed stranded copper, Class B stranding. Insulation is cross-linked polyethylene (XLPE) with excellent heat resistance. After multi-core cabling, PVC outer jacket is extruded for good overall protection. Compact structure, suitable for cable tray installation.

芯数规格Core Config

可选芯数：2芯、3芯、3+1芯、3+2芯、4芯、4+1芯；以三芯+地线为常用规格，可根据配电需求选择不同芯数配置，满足桥架集中布线的各类需求

Available cores: 2-core, 3-core, 3+1-core, 3+2-core, 4-core, 4+1-core. 3-core + ground is the common specification, different core configurations can be selected according to distribution requirements, meeting various needs of cable tray centralized wiring.

产品特性 Product Feature

支持桥架外露敷设，安装便捷，节省施工成本；XLPE绝缘电气性能稳定可靠，耐热性好；PVC外护套耐磨耐腐，防护性能优异；，适用于各类工业与商业建筑

Supports tray cable exposed run installation, convenient installation and saves construction cost. cross-linked polyethylene (XLPE) insulation has stable electrical performance and good heat resistance. PVC outer jacket is wear and corrosion resistant with excellent protection performance. Flame retardant performance meets standard requirements, suitable for various industrial and commercial buildings.

规格参数表 Specification Table

产品代号 Model No.	截面 mm^2	AWG/kcmil	导体结构 Constr.	绝缘厚度 Insul. mm	护套厚度 Jacket mm	近似外径 Dia. mm	近似重量 Wt. kg/km	载流量 Amp. A	直流电阻 Ω/km
BC-TCER-3C-20	2.0	14 AWG	7/0.60	0.76	1.2	9.7	115	22	8.80
BC-TCER-3C-35	3.5	12 AWG	7/0.80	0.76	1.2	11.0	166	27	5.00
BC-TCER-3C-55	5.5	10 AWG	7/1.00	0.76	1.3	12.5	236	36	3.20
BC-TCER-3C-80	8.0	8 AWG	7/1.21	1.14	1.4	15.8	349	49	2.20
BC-TCER-3C-14	14	6 AWG	7/1.60	1.14	1.5	18.5	545	67	1.30
BC-TCER-3C-22	22	4 AWG	7/2.00	1.14	1.6	21.4	798	85	0.80
BC-TCER-3C-30	30	2 AWG	19/1.42	1.40	1.7	25.2	1080	108	0.60
BC-TCER-3C-38	38	1 AWG	19/1.60	1.40	1.8	27.3	1331	126	0.50
BC-TCER-3C-50	50	1/0 AWG	19/1.83	1.40	1.8	29.9	1685	148	0.40
BC-TCER-3C-60	60	2/0 AWG	19/2.01	1.40	1.9	32.0	1992	166	0.30
BC-TCER-3C-80	80	3/0 AWG	19/2.32	1.65	2.0	36.7	2630	198	0.20
BC-TCER-3C-100	100	4/0 AWG	19/2.59	1.65	2.1	39.9	3228	225	0.16

建筑服务入口进线电缆
600V SER Service Entrance Cable





用途 Application

用于住宅、商业及工业建筑的600V及以下服务入口进线，作为从户外配电变压器到建筑内主配电盘的主干进线电缆，适用于架空引入或地下直埋等多种敷设方式

Used for 600V and below service entrance wiring in residential, commercial and industrial buildings. As the main feeder cable from outdoor distribution transformer to the main distribution panel inside the building. Suitable for various installation methods such as overhead introduction or underground direct burial.

结构 Construction

导体为无氧软铜导体，B类绞合结构；绝缘层为交联聚乙烯（XLPE），耐热性能优异；多芯成缆后挤包聚氯乙烯（PVC）外护套，整体防护性能好；通常为三芯+地线结构，满足单相或三相配电需求

Conductor is annealed stranded copper, Class B stranding. Insulation is cross-linked polyethylene (XLPE) with excellent heat resistance. After multi-core cabling, PVC outer jacket is extruded for good overall protection. Usually 3-core + ground structure, meeting single-phase or three-phase distribution requirements.

芯数规格Core Config

可选芯数：2芯+地线、3芯+地线、4芯；以三芯+地线为标准规格，可根据单相/三相配电需求选择不同芯数配置，满足各类建筑服务入口进线需求

Available cores: 2-core + ground, 3-core + ground, 4-core. 3-core + ground is the standard specification, different core configurations can be selected according to single-phase/three-phase distribution requirements, meeting various building service entrance wiring needs.

产品特性 Product Feature

专为建筑服务入口设计，承载能力强，可作为建筑主干进线；XLPE绝缘电气性能稳定可靠，耐热性好；PVC外护套耐候性好，适用于户外环境；，安装便捷，适用多种敷设方式

Designed specifically for building service entrance, high current carrying capacity, can be used as building main feeder. cross-linked polyethylene (XLPE) insulation has stable electrical performance and good heat resistance. PVC outer jacket has good weather resistance, suitable for outdoor environments. Flame retardant performance meets standard requirements, convenient installation, suitable for various installation methods.

规格参数表 Specification Table

产品代号 Model No.	截面 mm^2	AWG/kcmil	导体结构 Constr.	绝缘厚度 Insul. mm	护套厚度 Jacket mm	近似外径 Dia. mm	近似重量 Wt. kg/km	载流量 Amp. A	直流电阻 Ω/km
BC-SER -4C-8	8	8 AWG	7/1.21	1.14	1.4	17.5	447	44	2.20
BC-SER -4C-14	14	6 AWG	7/1.60	1.14	1.5	20.7	703	60	1.30
BC-SER -4C-22	22	4 AWG	7/2.00	1.14	1.6	23.9	1034	76	0.80
BC-SER -4C-30	30	2 AWG	19/1.42	1.40	1.7	28.1	1403	96	0.60
BC-SER -4C-38	38	1 AWG	19/1.60	1.40	1.8	30.5	1732	112	0.50
BC-SER -4C-50	50	1/0 AWG	19/1.83	1.40	1.8	33.5	2201	132	0.40
BC-SER -4C-60	60	2/0 AWG	19/2.01	1.40	1.9	35.9	2604	148	0.30
BC-SER -4C-80	80	3/0 AWG	19/2.32	1.65	2.0	41.2	3445	176	0.20
BC-SER -4C-100	100	4/0 AWG	19/2.59	1.65	2.1	44.8	4232	200	0.16

便携式软电缆

600V Flexible Power Cable



用途 Application

适用于移动电气设备、工地临时供电、重型机械连接、便携式电动工具等场合的柔性供电连

Suitable for flexible power connection of mobile electrical equipment, temporary construction power supply, heavy machinery connection, portable power tools, etc.

结构 Construction

多股细绞软铜导体，EPDM橡胶绝缘，CPE/氯丁橡胶护套

Multi-strand flexible copper conductor, EPDM rubber insulation, CPE/neoprene rubber jacket

芯数规格Core Config

2芯、3芯、4芯，可选带地线；规格

14AWG~4/0AWG（2.0~100mm²）2-core, 3-core, 4-core with optional ground; sizes 14AWG~4/0AWG (2.0~100mm²)

产品特性 Product Feature

优异的柔韧性和耐磨性，耐油、耐候、耐紫外线，适合户外和恶劣环境使用

Excellent flexibility and abrasion resistance, oil, weather and UV resistant, suitable for outdoor and harsh environments

规格参数表 Specification Table

产品代号 Model No.	截面 mm²	AWG/kcmil	导体结构 Constr.	绝缘厚度 Insul. mm	护套厚度 Jacket mm	近似外径 Dia. mm	近似重量 Wt. kg/km	载流量 Amp. A	直流电阻 Ω/km
BC-PORT-3C-2.0	2.0	14 AWG	7/0.60	1.0	1.2	11.9	161	15	8.80
BC-PORT-3C-3.5	3.5	12 AWG	7/0.80	1.0	1.2	13.4	222	20	5.00
BC-PORT-3C-5.5	5.5	10 AWG	7/1.00	1.2	1.4	16.3	336	30	3.20
BC-PORT-3C-8.0	8.0	8 AWG	7/1.21	1.4	1.5	19.0	466	40	2.20
BC-PORT-3C-14	14	6 AWG	7/1.60	1.4	1.6	22.2	697	55	1.30
BC-PORT-3C-22	22	4 AWG	7/2.00	1.6	1.8	26.6	1040	75	0.80
BC-PORT-3C-30	30	2 AWG	19/1.42	1.8	2.0	30.7	1395	95	0.60
BC-PORT-3C-38	38	1 AWG	19/1.60	2.0	2.2	34.3	1753	115	0.50
BC-PORT-3C-50	50	1/0 AWG	19/1.83	2.0	2.2	37.3	2171	135	0.40
BC-PORT-3C-60	60	2/0 AWG	19/2.01	2.2	2.4	40.9	2606	155	0.30
BC-PORT-3C-80	80	3/0 AWG	19/2.32	2.2	2.6	45.1	3324	190	0.20
BC-PORT-3C-100	100	4/0 AWG	19/2.59	2.4	2.8	50.0	4111	220	0.16
BC-PORT-3C-125	125	250MCM	37/2.07	2.6	3.0	55.3	5080	260	0.14
BC-PORT-3C-150	150	300MCM	37/2.27	2.8	3.2	60.2	6052	295	0.12
BC-PORT-3C-200	200	400MCM	37/2.62	3.0	3.4	67.7	7867	350	0.087
BC-PORT-3C-250	250	500MCM	37/2.93	3.2	3.6	74.5	9685	400	0.069
BC-PORT-3C-325	325	650MCM	61/2.60	3.4	3.8	83.2	12335	465	0.054
BC-PORT-3C-400	400	800MCM	61/2.89	3.6	4.0	91.0	14983	510	0.044
BC-PORT-3C-500	500	1000MCM	61/3.23	3.8	4.2	100.1	18447	575	0.035

600V
THWN-2 Heat &
Moisture Resistant
Rubber Insulated
Power Cable

600V
MC Metal Clad
Power Cable

600V
TC-ER Tray
Cable-Exposed
Run

600V
SER Service
Entrance Cable

600V
Flexible Power
Cable

600V Welding
Cable

600V Rubber
Flexible Cable

电焊机电缆
600V Welding Cable



用途 Application

适用于电焊机二次侧焊接电缆，可在高温、油污环境下使用，具有优良的耐磨性和耐候性

Suitable for welding machine secondary side cables. Can be used in high temperature and oily environments with excellent wear resistance and weatherability.

结构 Construction

第6类极软铜导体，EPDM乙丙橡胶绝缘，CPE/氯丁橡胶护套

Class 6 extra flexible copper conductor, EPDM rubber insulation, CPE/neoprene rubber sheath.

芯数规格Core Config

单芯，截面14~150mm²（标准规格系列）

Single core, cross-section 14~150mm² (Standard specification series)

产品特性 Product Feature

600V额定电压；极柔软，便于移动；耐磨、耐油、耐热；抗老化性能优良；适用于恶劣工作环境

600V rated voltage; extra flexible for easy movement; wear resistant, oil resistant, heat resistant; excellent aging resistance; suitable for harsh working environments.

规格参数表 Specification Table

产品代号 Model No.	截面 mm²	AWG/MCM	导体结构 Constr.	绝缘厚度 Insul. mm	护套厚度 Jacket mm	外径 Dia. mm	重量 kg/km	载流量 Amp. A	直流电阻 Ω/km
BC-WELD-1C-16	16	6 AWG	49/0.64	1.2	1.8	13.3	201	120	1.15
BC-WELD-1C-25	25	4 AWG	98/0.58	1.4	2.0	21.9	340	170	0.727
BC-WELD-1C-35	35	2 AWG	133/0.58	1.6	2.2	29.3	492	215	0.524
BC-WELD-1C-50	50	1/0 AWG	133/0.68	1.8	2.4	34.2	683	270	0.387
BC-WELD-1C-70	70	2/0 AWG	189/0.68	2.0	2.6	46.8	989	340	0.268
BC-WELD-1C-95	95	3/0 AWG	259/0.68	2.2	2.8	63.6	1396	415	0.193
BC-WELD-1C-120	120	4/0 AWG	336/0.68	2.4	3.0	80.3	1830	480	0.153
BC-WELD-1C-150	150	250 MCM	427/0.68	2.6	3.2	102.4	2394	550	0.124
BC-WELD-1C-185	185	300 MCM	513/0.68	2.8	3.4	121.9	3006	625	0.0991
BC-WELD-1C-240	240	400 MCM	646/0.68	3.0	3.6	152.2	3962	730	0.0754

橡胶软电缆
600V Rubber Flexible Cable



用途 Application

适用于工地临时供电、移动设备连接、家用电器及电动工具电源线，可在户外环境下使用

Suitable for temporary power supply on construction sites, mobile equipment connection, home appliances and power tool cords. Can be used outdoors.

结构 Construction

第5类软铜导体，EPDM乙丙橡胶绝缘，CPE/氯丁橡胶护套

Class 5 flexible copper conductor, EPDM rubber insulation, CPE/neoprene rubber sheath.

芯数规格Core Config

2~5芯，代表性规格3芯，截面2.0~38mm²（标准规格系列）

2~5 cores, representative 3-core, cross-section 2.0~38mm² (Standard specification series)

产品特性 Product Feature

300/500V额定电压；柔软耐用，便于移动；耐候、耐磨、耐油；适用于各种移动用电场景

300/500V rated voltage; flexible and durable for easy movement; weather resistant, wear resistant, oil resistant; suitable for various mobile power scenarios.

规格参数表 Specification Table

产品代号 Model No.	截面 mm²	AWG/MCM	导体结构 Constr.	绝缘厚度 Insul. mm	护套厚度 Jacket mm	外径 Dia. mm	重量 kg/km	载流量 Amp. A	直流电阻 Ω/km
BC-RUBBER -3C-2.0	2.0	14 AWG	7/0.60	1.0	1.2	11.9	161	12	8.80
BC-RUBBER -3C-3.5	3.5	12 AWG	7/0.80	1.0	1.2	13.4	222	18	5.00
BC-RUBBER -3C-5.5	5.5	10 AWG	7/1.00	1.2	1.4	16.3	336	25	3.20
BC-RUBBER -3C-8.0	8.0	8 AWG	7/1.21	1.4	1.5	19.0	466	35	2.20
BC-RUBBER -3C-14	14	6 AWG	7/1.60	1.4	1.6	22.2	697	50	1.30
BC-RUBBER -3C-22	22	4 AWG	7/2.00	1.6	1.8	26.6	1040	70	0.80
BC-RUBBER -3C-30	30	2 AWG	19/1.42	1.8	2.0	30.7	1395	90	0.60
BC-RUBBER -3C-50	50	1/0 AWG	19/1.83	2.0	2.4	37.7	2202	140	0.40

裸铜绞线 接地导体
Bare Copper Stranded Grounding Conductor



用途 Application

可用作架空传输配线、电气设备连接线、接地跳线与母线，也可作为避雷引下线、等电位连接导体，适配室内外各类电气连接场景

Used as overhead transmission distribution wires, electrical equipment connection wires, grounding jumpers and busbars, also as lightning down conductors and equipotential connection conductors, suitable for various indoor and outdoor electrical connection scenarios.

结构 Construction

采用高纯度无氧铜导体，分为实心与多股同心绞合两种结构，单线直径、绞合根数严格参照标准图纸；导体表面光洁，导电性能稳定

Adopts high-purity oxygen-free copper conductor, available in solid and multi-stranded concentric structures. Single wire diameter and stranding quantity strictly follow standard drawings. Smooth conductor surface with stable conductivity.

产品特性 Product Feature

导电性能优异，传输损耗极低；延展性好，便于弯折与端接；耐大气腐蚀、焊接性能好，是电气接地与小容量传输的通用导体

Excellent conductivity with extremely low transmission loss. Good ductility, easy to bend and terminate. Resistant to atmospheric corrosion and good welding performance, it is a general conductor for electrical grounding and small capacity transmission.

规格参数表 Specification Table

产品代号 Model No.	标称截面 Nominal Section (mm^2)	对应规格 AWG / MCM	导体结构 Conductor Structure	单线直径 d (mm)	导体外径 Conductor OD (mm)	标称重量 Nominal Weight (kg/km)	20℃最大直流电阻 Max DC Resistance @20℃ (Ω/km)
BC-GND-2.0	2.0	14 AWG	7×0.60	0.60	1.81	18	8.80
BC-GND-3.5	3.5	12 AWG	7×0.80	0.80	2.39	31	5.00
BC-GND-5.5	5.5	10 AWG	7×1.00	1.00	3.00	49	3.20
BC-GND-8.0	8.0	8 AWG	7×1.21	1.21	3.62	71	2.20
BC-GND-14	14	6 AWG	7×1.60	1.60	4.79	124	1.25
BC-GND-22	22	4 AWG	7/2.00	2.00	6.00	196	0.80
BC-GND-30	30	2 AWG	19/1.42	1.42	7.09	267	0.58
BC-GND-38	38	1 AWG	19/1.60	1.60	7.98	338	0.46
BC-GND-50	50	1/0 AWG	19/1.83	1.83	9.15	444	0.35
BC-GND-60	60	2/0 AWG	19/2.01	2.01	10.03	533	0.29
BC-GND-80	80	3/0 AWG	19/2.32	2.32	11.58	711	0.22
BC-GND-100	100	4/0 AWG	19/2.59	2.59	12.94	889	0.18
BC-GND-125	125	250 MCM	37×2.09	2.09	14.6	1128	0.139
BC-GND-150	150	300 MCM	37×2.29	2.29	16.0	1355	0.115
BC-GND-175	175	350 MCM	37×2.47	2.47	17.26	1576	0.0992
BC-GND-200	200	400 MCM	37×2.64	2.64	18.45	1801	0.0868
BC-GND-250	250	500 MCM	37×2.95	2.95	20.62	2248	0.0695
BC-GND-300	300	600 MCM	37×3.24	3.24	22.65	2712	0.0576
BC-GND-350	350	700 MCM	61×2.72	2.72	24.45	3151	0.0496
BC-GND-400	400	800 MCM	61×2.91	2.91	26.16	3607	0.0433
BC-GND-500	500	1000 MCM	61×3.25	3.25	29.22	4499	0.0348

VOLINIX

低压电力电缆系列

LOW VOLTAGE POWER CABLE SERIES

章节概述 CHAPTER OVERVIEW:

本系列产品适用于0.6/1kV及以下低压配电系统，广泛用于工业、商业、住宅等各类建筑的电力输配。产品采用优质铜/铝导体，XLPE或PVC绝缘，具有优良的电气性能和机械性能。产品符合国际通用标准，可根据用户需求提供铠装、低烟无卤、耐火等多种特殊型号。

This series is suitable for 0.6/1kV and below low voltage distribution systems, widely used in power transmission of industrial, commercial and residential buildings. With high-quality copper/aluminum conductors and XLPE or PVC insulation, the products feature excellent electrical and mechanical properties. Various special types such as armored, LSZH and fire-resistant are available.

铜芯交联聚乙烯绝缘聚氯乙烯护套电力电缆

0.6/1KV CU/XLPE/PVC COPPER CONDUCTOR XLPE INSULATED PVC SHEATHED POWER CABLE





用途 Application

用于工业、商业及民用建筑的0.6/1kV及以下配电系统，可固定敷设于室内、电缆沟、管道及桥架中，适用于各类建筑配电、工业动力及照明线路

Used for 0.6/1kV and below power distribution systems in industrial, commercial and civil buildings.

结构 Construction

导体为无氧软铜导体，第2类绞合结构；绝缘层为交联聚乙烯（XLPE），电气性能优异；多芯成缆后挤包聚氯乙烯（PVC）外护套，整体防护性能好

Annealed copper conductor, Class 2 stranded; cross-linked polyethylene (XLPE) insulation; PVC outer sheath.

芯数规格 Core Config

可选芯数：1芯、2芯、3芯、4芯、5芯、3+1芯、3+2芯、4+1芯；可根据配电需求选择不同芯数配置

Available: 1C, 2C, 3C, 4C, 5C, 3+1C, 3+2C, 4+1C.

产品特性 Product Feature

XLPE绝缘电气性能优异，介质损耗低，载流量大；PVC外护套耐磨耐腐，防护性能好；导体长期工作温度90℃，短路温度250℃

Excellent electrical performance, high current carrying capacity, 90℃ conductor temperature.

规格参数表 Specification Table

产品代号 Model No.	截面 mm²	AWG/ kcmil	导体结构 Constr	绝缘厚度 Insul. mm	护套厚度 Jacket mm	近似外径 Dia. mm	直流电阻 Ω/km	载流量 Amp. A	近似重量 Wt. kg/km
LV-CU-1C -1.5	1.5	16 AWG	7/0.52	0.7	1.4	5.8	11.49	20	46
LV-CU-1C -2.5	2.5	14 AWG	7/0.67	0.7	1.4	6.3	6.90	27	59
LV-CU-1C -4	4	12 AWG	7/0.85	0.7	1.4	6.8	4.31	36	77
LV-CU-1C -6	6	10 AWG	7/1.04	0.7	1.4	7.4	2.87	46	99
LV-CU-1C -10	10	8 AWG	7/1.35	0.7	1.4	8.3	1.72	65	143
LV-CU-1C -16	16	6 AWG	7/1.71	0.7	1.4	9.4	1.08	87	205
LV-CU-1C -25	25	4 AWG	7/2.13	0.9	1.5	11.2	0.690	118	308
LV-CU-1C -35	35	2 AWG	7/2.52	0.9	1.5	12.4	0.493	150	408
LV-CU-1C -50	50	1 AWG	19/1.83	1.0	1.6	14.4	0.345	184	567
LV-CU-1C -70	70	1/0 AWG	19/2.17	1.1	1.6	16.2	0.246	240	768
LV-CU-1C -95	95	2/0 AWG	19/2.52	1.1	1.6	18.0	0.181	300	1009
LV-CU-1C -120	120	3/0 AWG	19/2.84	1.2	1.7	20.0	0.144	355	1263
LV-CU-1C -150	150	4/0 AWG	37/2.27	1.4	1.8	22.3	0.115	415	1573
LV-CU-1C -185	185	250 kcmil	37/2.52	1.6	1.9	24.6	0.0932	480	1932
LV-CU-1C -240	240	300 kcmil	37/2.87	1.7	2.0	27.5	0.0718	575	2475
LV-CU-1C -300	300	350 kcmil	37/3.21	1.8	2.1	30.3	0.0575	665	3066
LV-CU-1C -400	400	500 kcmil	37/3.71	2.0	2.2	34.4	0.0431	790	4044
LV-CU-1C -500	500	600 kcmil	61/3.23	2.2	2.4	38.3	0.0345	920	5041
LV-CU-1C -630	630	750 kcmil	61/3.63	2.4	2.6	42.7	0.0274	1070	6325
LV-CU-1C -800	800	1000 kcmil	91/3.35	2.8	2.3	51.3	0.0216	1240	7957
LV-CU-1C -1000	1000	1250 kcmil	91/3.74	3.0	2.4	56.8	0.0172	1425	9883

铜芯钢带铠装电力电缆

0.6/1KV CU/XLPE/SWA/PVCCOPPER CONDUCTOR XLPE INSULATED STEEL TAPE ARMORED PVC SHEATHED POWER CABLE





用途 Application

适用于地下直埋、电缆沟、隧道等机械防护要求较高的场合，可承受一定的机械外力，广泛用于工业、矿山、市政等配电系统

Suitable for direct burial, cable trenches, tunnels with high mechanical protection requirements.

结构 Construction

铜导体，XLPE绝缘，钢带铠装（STA），PVC外护套；铠装层提供机械保护，防止外力损伤

Copper conductor, cross-linked polyethylene (XLPE) insulation, steel tape armor (STA), PVC outer sheath.

芯数规格 Core Config

可选芯数：1芯、2芯、3芯、4芯、5芯、3+1芯、3+2芯、4+1芯；铠装层为双层钢带间隙绕包

Available: 1C, 2C, 3C, 4C, 5C, 3+1C, 3+2C, 4+1C with double steel tape armor.

产品特性 Product Feature

钢带铠装提供优异的机械保护，可直埋敷设；XLPE绝缘电气性能优异；PVC护套耐腐耐磨；导体长期工作温度90℃

Excellent mechanical protection with steel armor, suitable for direct burial, 90℃ conductor temperature.

规格参数表 Specification Table

产品代号 Model No.	截面 mm²	AWG/ kcmil	导体结构 Constr	绝缘厚度 Insul. mm	护套厚度 Jacket mm	近似外径 Dia. mm	直流电阻 Ω/km	载流量 Amp. A	近似重量 Wt. kg/km
LV-CUS-1C-1.5	1.5	16 AWG	7/0.52	0.7	1.4	9.3	11.49	19	77
LV-CUS-1C-2.5	2.5	14 AWG	7/0.67	0.7	1.4	9.7	6.90	25	90
LV-CUS-1C-4	4	12 AWG	7/0.85	0.7	1.4	10.2	4.31	34	109
LV-CUS-1C-6	6	10 AWG	7/1.04	0.7	1.4	10.8	2.87	43	132
LV-CUS-1C-10	10	8 AWG	7/1.35	0.7	1.4	11.8	1.72	61	178
LV-CUS-1C-16	16	6 AWG	7/1.71	0.7	1.4	12.8	1.08	82	242
LV-CUS-1C-25	25	4 AWG	7/2.13	0.9	1.5	14.7	0.690	112	349
LV-CUS-1C-35	35	2 AWG	7/2.52	0.9	1.5	15.9	0.493	142	452
LV-CUS-1C-50	50	1 AWG	19/1.83	1.0	1.6	18.4	0.345	174	753
LV-CUS-1C-70	70	1/0 AWG	19/2.17	1.1	1.6	20.3	0.246	228	1022
LV-CUS-1C-95	95	2/0 AWG	19/2.52	1.1	1.6	21.5	0.181	285	1064
LV-CUS-1C-120	120	3/0 AWG	19/2.84	1.2	1.7	24.2	0.144	337	1688
LV-CUS-1C-150	150	4/0 AWG	37/2.27	1.4	1.8	27.3	0.115	394	2116
LV-CUS-1C-185	185	250 kcmil	37/2.52	1.6	1.9	28.1	0.0932	456	2003
LV-CUS-1C-240	240	300 kcmil	37/2.87	1.7	2.0	31.0	0.0718	546	2553
LV-CUS-1C-300	300	350 kcmil	37/3.21	1.8	2.1	33.8	0.0575	631	3149
LV-CUS-1C-400	400	500 kcmil	37/3.71	2.0	2.2	37.9	0.0431	750	4136
LV-CUS-1C-500	500	600 kcmil	61/3.23	2.2	2.4	41.8	0.0345	874	5143
LV-CUS-1C-630	630	750 kcmil	61/3.63	2.4	2.6	46.2	0.0274	1016	6437
LV-CUS-1C-800	800	1000 kcmil	91/3.35	2.6	2.5	55.3	0.0216	1178	10741
LV-CUS-1C-1000	1000	1250 kcmil	91/3.74	2.8	2.6	60.8	0.0172	1353	13342

0.6/1KV CU/XLPE PVC COPPER CONDUCTOR XLPE NSULATED PVC SHEATHED POWER CABLE

0.6/1KV CU/XLPE SWA/PVCCOPPER CONDUCTOR XLPE INSULATED STEEL TAPE ARMORED PVC SHEATHED POWER CABLE

0.6/1KV AL/XLPE PVC ALUMINUM CONDUCTOR XLPE INSULATED PVC SHEATHED POWER CABLE

0.6/1KV AL/XLPE SWA/PVC ALUMINUM CONDUCTOR XLPE INSULATED STEEL TAPE ARMORED PVC SHEATHED POWER CABLE

铝芯交联聚乙烯绝缘聚氯乙烯护套电力电缆

0.6/1KV AL/XLPE PVC ALUMINUM CONDUCTOR XLPE INSULATED PVC SHEATHED POWER CABLE





用途 Application

适用于中低压配电系统中长距离输电线路，可有效降低线路成本；广泛用于架空、管道、桥架等敷设方式

Suitable for long-distance transmission lines in medium and low voltage distribution systems, cost-effective.

结构 Construction

铝导体，第2类绞合结构；XLPE绝缘层；PVC外护套；重量轻，安装便捷

Aluminum conductor, Class 2 stranded; cross-linked polyethylene (XLPE) insulation; PVC outer sheath; lightweight.

芯数规格 Core Config

可选芯数：1芯、2芯、3芯、4芯、5芯、3+1芯、3+2芯、4+1芯；截面范围1.5~1000mm²

Available: 1C, 2C, 3C, 4C, 5C, 3+1C, 3+2C, 4+1C, 1.5~1000mm².

产品特性 Product Feature

铝导体重量轻，成本低，适合长距离输电；XLPE绝缘电气性能优异；导体长期工作温度90℃

Lightweight aluminum conductor, cost-effective for long distance, 90℃ conductor temperature.

规格参数表 Specification Table

产品代号 Model No.	截面 mm²	AWG/ kcmil	导体结构 Constr	绝缘厚度 Insul. mm	护套厚度 Jacket mm	近似外径 Dia. mm	直流电阻 Ω/km	载流量 Amp. A	近似重量 Wt. kg/km
LV-AL-1C -1.5	1.5	16 AWG	7/0.52	0.7	1.4	5.8	18.85	15	37
LV-AL-1C -2.5	2.5	14 AWG	7/0.67	0.7	1.4	6.3	11.31	21	43
LV-AL-1C -4	4	12 AWG	7/0.85	0.7	1.4	6.8	7.07	28	52
LV-AL-1C -6	6	10 AWG	7/1.04	0.7	1.4	7.4	4.71	35	62
LV-AL-1C -10	10	8 AWG	7/1.35	0.7	1.4	8.3	2.83	50	81
LV-AL-1C -16	16	6 AWG	7/1.71	0.7	1.4	9.4	1.77	67	106
LV-AL-1C -25	25	4 AWG	7/2.13	0.9	1.5	11.2	1.13	92	153
LV-AL-1C -35	35	2 AWG	7/2.52	0.9	1.5	12.4	0.808	117	191
LV-AL-1C -50	50	1 AWG	19/1.83	1.0	1.6	14.4	0.566	143	257
LV-AL-1C -70	70	1/0 AWG	19/2.17	1.1	1.6	16.2	0.404	187	334
LV-AL-1C -95	95	2/0 AWG	19/2.52	1.1	1.6	18.0	0.298	234	420
LV-AL-1C -120	120	3/0 AWG	19/2.84	1.2	1.7	20.0	0.236	276	519
LV-AL-1C -150	150	4/0 AWG	37/2.27	1.4	1.8	22.3	0.189	323	643
LV-AL-1C -185	185	250 kcmil	37/2.52	1.6	1.9	24.6	0.153	374	785
LV-AL-1C -240	240	300 kcmil	37/2.87	1.7	2.0	27.5	0.118	448	987
LV-AL-1C -300	300	350 kcmil	37/3.21	1.8	2.1	30.3	0.0943	518	1206
LV-AL-1C -400	400	500 kcmil	37/3.71	2.0	2.2	34.4	0.0707	616	1564
LV-AL-1C -500	500	600 kcmil	61/3.23	2.2	2.4	38.3	0.0566	717	1941
LV-AL-1C -630	630	750 kcmil	61/3.63	2.4	2.6	42.7	0.0449	834	2419
LV-AL-1C -800	800	1000 kcmil	91/3.35	2.8	2.3	51.3	0.0353	967	3005
LV-AL-1C -1000	1000	1250 kcmil	91/3.74	3.0	2.4	56.8	0.0283	1111	3693

铝芯钢带铠装电力电缆

0.6/1KV AL/XLPE/SWA/PVC ALUMINUM CONDUCTOR XLPE INSULATED STEEL TAPE ARMORED PVC SHEATHED POWER CABLE





用途 Application

适用于地下直埋、电缆沟等机械防护要求较高的长距离输电线路，铝导体降低线路成本，铠装层提供机械保护

Suitable for direct burial long-distance transmission lines with mechanical protection requirements.

结构 Construction

铝导体，XLPE绝缘，钢带铠装（STA），PVC外护套；重量轻，成本低，机械防护好

Aluminum conductor, cross-linked polyethylene (XLPE) insulation, steel tape armor, PVC outer sheath; lightweight, cost-effective.

芯数规格 Core Config

可选芯数：1芯、2芯、3芯、4芯、5芯、3+1芯、3+2芯、4+1芯；铠装层为双层钢带间隙绕包

Available: 1C, 2C, 3C, 4C, 5C, 3+1C, 3+2C, 4+1C with double steel tape armor.

产品特性 Product Feature

铝导体重量轻、成本低；钢带铠装提供机械保护，可直埋敷设；导体长期工作温度90℃

Lightweight aluminum conductor with steel armor, suitable for direct burial, 90℃ conductor temperature.

规格参数表 Specification Table

产品代号 Model No.	截面 mm²	AWG/ kcmil	导体结构 Constr	绝缘厚度 Insul. mm	护套厚度 Jacket mm	近似外径 Dia. mm	直流电阻 Ω/km	载流量 Amp. A	近似重量 Wt. kg/km
LV-ALS-1C -1.5	1.5	16 AWG	7/0.52	0.7	1.4	9.3	18.85	14	67
LV-ALS-1C -2.5	2.5	14 AWG	7/0.67	0.7	1.4	9.7	11.31	20	75
LV-ALS-1C -4	4	12 AWG	7/0.85	0.7	1.4	10.2	7.07	26	84
LV-ALS-1C -6	6	10 AWG	7/1.04	0.7	1.4	10.8	4.71	34	95
LV-ALS-1C -10	10	8 AWG	7/1.35	0.7	1.4	11.8	2.83	48	116
LV-ALS-1C -16	16	6 AWG	7/1.71	0.7	1.4	12.8	1.77	64	143
LV-ALS-1C -25	25	4 AWG	7/2.13	0.9	1.5	14.7	1.13	87	194
LV-ALS-1C -35	35	2 AWG	7/2.52	0.9	1.5	15.9	0.808	111	235
LV-ALS-1C -50	50	1 AWG	19/1.83	1.0	1.6	18.4	0.566	136	335
LV-ALS-1C -70	70	1/0 AWG	19/2.17	1.1	1.6	20.3	0.404	177	437
LV-ALS-1C -95	95	2/0 AWG	19/2.52	1.1	1.6	21.5	0.298	222	475
LV-ALS-1C -120	120	3/0 AWG	19/2.84	1.2	1.7	24.2	0.236	263	685
LV-ALS-1C -150	150	4/0 AWG	37/2.27	1.4	1.8	27.3	0.189	307	862
LV-ALS-1C -185	185	250 kcmil	37/2.52	1.6	1.9	28.1	0.153	355	856
LV-ALS-1C -240	240	300 kcmil	37/2.87	1.7	2.0	31.0	0.118	426	1065
LV-ALS-1C -300	300	350 kcmil	37/3.21	1.8	2.1	33.8	0.0943	492	1289
LV-ALS-1C -400	400	500 kcmil	37/3.71	2.0	2.2	37.9	0.0707	585	1656
LV-ALS-1C -500	500	600 kcmil	61/3.23	2.2	2.4	41.8	0.0566	681	2043
LV-ALS-1C -630	630	750 kcmil	61/3.63	2.4	2.6	46.2	0.0449	792	2531
LV-ALS-1C -800	800	1000 kcmil	91/3.35	2.6	2.5	55.3	0.0353	918	4056
LV-ALS-1C -1000	1000	1250 kcmil	91/3.74	2.8	2.6	60.8	0.0283	1055	4985

VOLINIX

矿物质电力电缆系列

MINERAL INSULATED POWER CABLE SERIES

章节概述 CHAPTER OVERVIEW:

本系列产品采用矿物绝缘和金属护套结构，具有极高的耐火性能和使用寿命，可在高温、高辐射等恶劣环境下正常工作。广泛应用于高层建筑、地铁、机场、医院等对消防要求较高的场所。产品符合国际通用矿物绝缘电缆标准。

This series features mineral insulation and metal sheath construction, offering exceptional fire resistance and long service life. Suitable for high temperature and high radiation environments. Widely used in high-rise buildings, subways, airports, hospitals and other places with high fire safety requirements. Compliant with international mineral insulated cable standards.

0.6/1kV
MICC-CWS Flexible
Copper Corrugated
Sheath MI Cable

0.6/1kV
MICA-CWS Flexible
Aluminum
Corrugated Sheath
MI Cable

750V
MICC Mineral
Insulated Copper
Sheathed Cable

0.6/1kV LSZH
Low Smoke Zero
Halogen Flame
Retardant Power
Cable

0.6/1kV
Fire Resistant
Power Cable

柔性铜皱纹护套矿物绝缘电缆
0.6/1KV MICC-CWS Flexible Copper Corrugated Sheath MI Cable

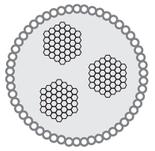

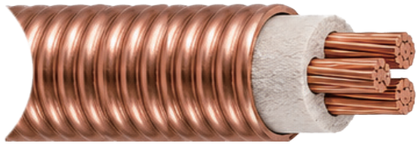

用途 Application

适用于消防系统、应急照明、火灾报警等重要线路，在火灾条件下保持电路完整性，保障生命安全和关键设备运行

Suitable for fire protection systems, emergency lighting, fire alarm circuits, maintains circuit integrity during fire.

结构 Construction

铜导体，云母带耐火层，XLPE绝缘，铜皱纹护套；铜护套提供优异的耐火和机械保护性能

Copper conductor, mica tape fire resistant layer, cross-linked polyethylene (XLPE) insulation, corrugated copper sheath.

芯数规格　Core Config

可选芯数：1芯、2芯、3芯、4芯、7芯、12芯、19芯等；截面范围1.0~400mm²

Available: 1C, 2C, 3C, 4C, 7C, 12C, 19C, 1.0~400mm².

产品特性　Product Feature

优异的耐火性能，火灾条件下保持90分钟电路完整性；铜护套耐腐蚀、机械强度优异；无卤低烟，安全环保

Excellent fire resistance, 90min circuit integrity during fire, halogen-free low smoke.

规格参数表 Specification Table

产品代号 Model No.	截面 mm²	AWG/ kcmil	导体结构 Constr	绝缘厚度 Insul. mm	护套厚度 Jacket mm	近似外径 Dia. mm	直流电阻 Ω/km	载流量 Amp. A	近似重量 Wt. kg/km
MI-CC-1C -1.0	1.0	18 AWG	7/0.43	0.7	1.4	5.5	17.6	15	184.3
MI-CC-1C -1.5	1.5	16 AWG	7/0.52	0.7	1.4	5.8	12.1	20	201.4
MI-CC-1C -2.5	2.5	14 AWG	7/0.67	0.7	1.4	6.2	7.0	30	231.4
MI-CC-1C -4.0	4.0	12 AWG	7/0.85	0.7	1.4	6.8	4.4	40	270.0
MI-CC-1C -6.0	6.0	10 AWG	7/1.04	0.7	1.4	7.3	2.9	55	314.5
MI-CC-1C -10	10	8 AWG	7/1.35	0.7	1.4	8.2	1.8	80	393.7
MI-CC-1C -16	16	6 AWG	7/1.70	0.7	1.4	9.3	1.1	110	496.3
MI-CC-1C -25	25	4 AWG	7/2.14	0.9	1.5	11.2	0.7	150	702.6
MI-CC-1C -35	35	2 AWG	7/2.52	0.9	1.5	12.4	0.5	190	850.7
MI-CC-1C -50	50	1/0 AWG	19/1.78	1.0	1.6	14.1	0.4	240	1113.1
MI-CC-1C -70	70	2/0 AWG	19/2.14	1.1	1.6	16.1	0.268	310	1414.4
MI-CC-1C -95	95	3/0 AWG	19/2.52	1.1	1.6	18.0	0.2	385	1744.9
MI-CC-1C -120	120	4/0 AWG	37/2.03	1.2	1.7	20.0	0.153	460	2141.6
MI-CC-1C -150	150	250 MCM	37/2.25	1.4	1.8	22.2	0.124	535	2623.2
MI-CC-1C -185	185	300 MCM	37/2.52	1.6	1.9	24.6	0.1	615	3193.0
MI-CC-1C -240	240	400 MCM	61/2.25	1.7	2.0	27.6	0.0754	730	3980.7
MI-CC-1C -300	300	500 MCM	61/2.52	1.8	2.1	30.5	0.0601	840	4820.9
MI-CC-1C -400	400	800 MCM	61/2.85	2.0	2.2	34.1	0.0440	1010	6127.2

柔性铝皱纹护套矿物绝缘电缆

0.6/1KV MICA-CWS Flexible Aluminum Corrugated Sheath MI Cable

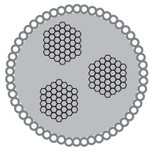



用途 Application

适用于消防系统、应急照明等耐火要求较高的场合，铝护套重量轻、成本低，兼具良好的耐火性能

Suitable for fire protection systems, emergency lighting with fire resistance requirements, lightweight aluminum sheath.

结构 Construction

铜导体，云母带耐火层，XLPE绝缘，铝皱纹护套；铝护套提供耐火保护和电磁屏蔽

Copper conductor, mica tape fire resistant layer, cross-linked polyethylene (XLPE) insulation, corrugated aluminum sheath.

芯数规格　Core Config

可选芯数：1芯、2芯、3芯、4芯、7芯、12芯、19芯等；截面范围1.0~400mm²

Available: 1C, 2C, 3C, 4C, 7C, 12C, 19C, 1.0~400mm².

产品特性　Product Feature

良好的耐火性能，火灾条件下保持电路完整性；铝护套重量轻、成本低；无卤低烟，安全环保

Good fire resistance, lightweight aluminum sheath, cost-effective, halogen-free low smoke.

规格参数表 Specification Table

产品代号 Model No.	截面 mm²	AWG/ kcmil	导体结构 Constr	绝缘厚度 Insul. mm	护套厚度 Jacket mm	近似外径 Dia. mm	直流电阻 Ω/km	载流量 Amp. A	近似重量 Wt. kg/km
MI-AC-1C -1.0	1.0	18 AWG	7/0.43	0.7	1.4	5.5	17.6	15	184.3
MI-AC-1C -1.5	1.5	16 AWG	7/0.52	0.7	1.4	5.8	12.1	20	201.4
MI-AC-1C -2.5	2.5	14 AWG	7/0.67	0.7	1.4	6.2	7.0	30	231.4
MI-AC-1C -4.0	4.0	12 AWG	7/0.85	0.7	1.4	6.8	4.4	40	270.0
MI-AC-1C -6.0	6.0	10 AWG	7/1.04	0.7	1.4	7.3	2.9	55	314.5
MI-AC-1C -10	10	8 AWG	7/1.35	0.7	1.4	8.2	1.8	80	393.7
MI-AC-1C -16	16	6 AWG	7/1.70	0.7	1.4	9.3	1.1	110	496.3
MI-AC-1C -25	25	4 AWG	7/2.14	0.9	1.5	11.2	0.7	150	702.6
MI-AC-1C -35	35	2 AWG	7/2.52	0.9	1.5	12.4	0.5	190	850.7
MI-AC-1C -50	50	1/0 AWG	19/1.78	1.0	1.6	14.1	0.4	240	1113.1
MI-AC-1C -70	70	2/0 AWG	19/2.14	1.1	1.6	16.1	0.268	310	1414.4
MI-AC-1C -95	95	3/0 AWG	19/2.52	1.1	1.6	18.0	0.2	385	1744.9
MI-AC-1C -120	120	4/0 AWG	37/2.03	1.2	1.7	20.0	0.153	460	2141.6
MI-AC-1C -150	150	250 MCM	37/2.25	1.4	1.8	22.2	0.124	535	2623.2
MI-AC-1C -185	185	300 MCM	37/2.52	1.6	1.9	24.6	0.1	615	3193.0
MI-AC-1C -240	240	400 MCM	61/2.25	1.7	2.0	27.6	0.0754	730	3980.7
MI-AC-1C -300	300	500 MCM	61/2.52	1.8	2.1	30.5	0.0601	840	4820.9
MI-AC-1C -400	400	800 MCM	61/2.85	2.0	2.2	34.1	0.0440	1010	6127.2

铜护套矿物绝缘电缆
750V MICC Mineral Insulated Copper Sheathed Cable

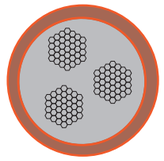



用途 Application

适用于高温、高湿、强腐蚀等恶劣环境下的重要线路，如冶金、化工、电力等行业的关键控制和动力线路

Suitable for critical circuits in harsh environments like metallurgy, chemical, power industries.

结构 Construction

实心铜导体，云母带耐火层，XLPE绝缘，无缝铜护套；铜护套提供全面的机械和化学保护

Solid copper conductor, mica tape fire resistant layer, cross-linked polyethylene (XLPE) insulation, seamless copper sheath.

芯数规格　Core Config

可选芯数：1芯、2芯、3芯、4芯、7芯、12芯等；截面范围1.0~400mm²

Available: 1C, 2C, 3C, 4C, 7C, 12C, 1.0~400mm².

产品特性　Product Feature

极致的耐火性能和机械强度；铜护套耐腐蚀、防爆、防水；使用寿命长，维护成本低

Ultimate fire resistance and mechanical strength, corrosion resistant copper sheath, long service life.

规格参数表 Specification Table

产品代号 Model No.	截面 mm²	AWG/ kcmil	导体结构 Constr	绝缘厚度 Insul. mm	护套厚度 Jacket mm	近似外径 Dia. mm	直流电阻 Ω/km	载流量 Amp. A	近似重量 Wt. kg/km
MI-CS-1C -1.0	1.0	18 AWG	1/1.13	0.7	1.4	5.3	17.6	15	176.8
MI-CS-1C -1.5	1.5	16 AWG	1/1.38	0.7	1.4	5.6	12.1	20	193.0
MI-CS-1C -2.5	2.5	14 AWG	1/1.78	0.7	1.4	6.0	7.0	30	220.6
MI-CS-1C -4.0	4.0	12 AWG	1/2.26	0.7	1.4	6.5	4.4	40	256.5
MI-CS-1C -6.0	6.0	10 AWG	1/2.76	0.7	1.4	7.0	2.9	55	297.7
MI-CS-1C -10	10	8 AWG	1/3.57	0.7	1.4	7.8	1.8	80	371.2
MI-CS-1C -16	16	6 AWG	1/4.51	0.7	1.4	8.7	1.1	110	468.6
MI-CS-1C -25	25	4 AWG	1/5.64	0.9	1.5	10.4	0.7	150	662.2
MI-CS-1C -35	35	2 AWG	1/6.68	0.9	1.5	11.5	0.5	190	805.1
MI-CS-1C -50	50	1/0 AWG	1/7.98	1.0	1.6	13.2	0.4	240	1061.8
MI-CS-1C -70	70	2/0 AWG	1/9.44	1.1	1.6	14.8	0.268	310	1342.8
MI-CS-1C -95	95	3/0 AWG	1/11.0	1.1	1.6	16.4	0.2	385	1653.9
MI-CS-1C -120	120	4/0 AWG	1/12.4	1.2	1.7	18.2	0.153	460	2031.7
MI-CS-1C -150	150	250 MCM	1/13.8	1.4	1.8	20.2	0.124	535	2495.0
MI-CS-1C -185	185	300 MCM	1/15.3	1.6	1.9	22.3	0.1	615	3027.6
MI-CS-1C -240	240	400 MCM	1/17.5	1.7	2.0	24.9	0.0754	730	3775.5
MI-CS-1C -300	300	500 MCM	1/19.5	1.8	2.1	27.3	0.0601	840	4571.2
MI-CS-1C -400	400	800 MCM	1/22.6	2.0	2.2	31.0	0.0440	1010	5872.5

低烟无卤阻燃电力电缆
0.6/1KV LSZH LOW SMOKE ZERO HALOGEN FLAME RETARDANT POWER CABLE

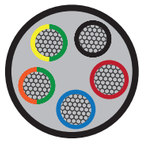



用途 Application

适用于地铁、隧道、高层建筑、医院、学校等人员密集场所，以及对环保和安全要求较高的配电系统

Suitable for subway, tunnels, high-rise buildings, hospitals, schools and other crowded places.

结构 Construction

铜导体，XLPE绝缘，低烟无卤（LSZH）护套；燃烧时烟量少、无卤素气体释放

Copper conductor, cross-linked polyethylene (XLPE) insulation, low smoke zero halogen (LSZH) sheath.

芯数规格　Core Config

可选芯数：1芯、2芯、3芯、4芯、5芯、3+1芯、3+2芯、4+1芯；阻燃等级ZA/ZB/ZC级

Available: 1C, 2C, 3C, 4C, 5C, 3+1C, 3+2C, 4+1C; Flame retardant class ZA/ZB/ZC.

产品特性　Product Feature

低烟：燃烧时烟密度低，能见度高；无卤：不含卤素，燃烧时无腐蚀性气体；阻燃：阻止火焰蔓延

Low smoke, zero halogen, flame retardant, safe and environmentally friendly.

规格参数表 Specification Table

产品代号 Model No.	截面 mm²	AWG/ kcmil	导体结构 Constr	绝缘厚度 Insul. mm	护套厚度 Jacket mm	近似外径 Dia. mm	直流电阻 Ω/km	载流量 Amp. A	近似重量 Wt. kg/km
LV-LS-1C -1.5	1.5	16 AWG	7/0.52	0.7	1.4	5.8	11.49	20	46
LV-LS-1C -2.5	2.5	14 AWG	7/0.67	0.7	1.4	6.2	6.90	27	58
LV-LS-1C -4	4	12 AWG	7/0.85	0.7	1.4	6.8	4.31	36	76
LV-LS-1C -6	6	10 AWG	7/1.04	0.7	1.4	7.3	2.87	46	99
LV-LS-1C -10	10	8 AWG	7/1.35	0.7	1.4	8.2	1.72	65	142
LV-LS-1C -16	16	6 AWG	7/1.71	0.7	1.4	9.3	1.08	87	205
LV-LS-1C -25	25	4 AWG	7/2.13	0.9	1.5	11.3	0.690	118	309
LV-LS-1C -35	35	2 AWG	7/2.52	0.9	1.5	12.5	0.493	150	411
LV-LS-1C -50	50	1 AWG	19/1.83	1.0	1.6	14.4	0.345	184	567
LV-LS-1C -70	70	1/0 AWG	19/2.17	1.1	1.6	16.2	0.246	240	768
LV-LS-1C -95	95	2/0 AWG	19/2.52	1.1	1.6	18.6	0.181	300	1026
LV-LS-1C -120	120	3/0 AWG	19/2.84	1.2	1.7	20.0	0.144	355	1263
LV-LS-1C -150	150	4/0 AWG	37/2.27	1.4	1.8	22.3	0.115	415	1573
LV-LS-1C -185	185	250 kcmil	37/2.52	1.6	1.9	24.6	0.0932	480	1932
LV-LS-1C -240	240	300 kcmil	37/2.87	1.7	2.0	27.5	0.0718	575	2475
LV-LS-1C -300	300	350 kcmil	37/3.21	1.8	2.1	30.3	0.0575	665	3066
LV-LS-1C -400	400	500 kcmil	37/3.71	2.0	2.2	34.4	0.0431	790	4044
LV-LS-1C -500	500	600 kcmil	61/3.23	2.2	2.4	38.3	0.0345	920	5041
LV-LS-1C -630	630	750 kcmil	61/3.63	2.4	2.6	42.7	0.0274	1070	6325
LV-LS-1C -800	800	1000 kcmil	91/3.35	2.6	2.4	51.5	0.0216	1240	8116
LV-LS-1C -1000	1000	1250 kcmil	91/3.74	2.8	2.5	57.0	0.0172	1425	10080

耐火电力电缆
0.6/1KV Fire Resistant Power Cable

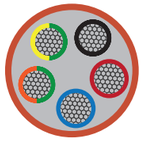



用途 Application

适用于消防系统、应急照明、火灾报警、电梯等重要设施的供电线路，在火灾条件下保持一定时间的正常运行

Suitable for fire protection systems, emergency lighting, fire alarm, elevator power supply circuits.

结构 Construction

铜导体，云母带耐火层，XLPE绝缘，PVC外护套；云母带在高温下形成耐火保护层

Copper conductor, mica tape fire resistant layer, cross-linked polyethylene (XLPE) insulation, PVC outer sheath.

芯数规格　Core Config

可选芯数：1芯、2芯、3芯、4芯、5芯、3+1芯、3+2芯、4+1芯；耐火等级A级/B级

Available: 1C, 2C, 3C, 4C, 5C, 3+1C, 3+2C, 4+1C; Fire resistant class A/B.

产品特性　Product Feature

优异的耐火性能，火灾条件下保持90分钟电路完整性；结构稳定，安全可靠

Excellent fire resistance, 90min circuit integrity during fire.

规格参数表 Specification Table

产品代号 Model No.	截面 mm²	AWG/ kcmil	导体结构 Constr	绝缘厚度 Insul. mm	护套厚度 Jacket mm	近似外径 Dia. mm	直流电阻 Ω/km	载流量 Amp. A	近似重量 Wt. kg/km
LV-FR-1C -1.5	1.5	16 AWG	7/0.52	0.7	1.4	6.3	11.49	20	48
LV-FR-1C -2.5	2.5	14 AWG	7/0.67	0.7	1.4	6.8	6.90	27	62
LV-FR-1C -4	4	12 AWG	7/0.85	0.7	1.4	7.3	4.31	36	80
LV-FR-1C -6	6	10 AWG	7/1.04	0.7	1.4	7.9	2.87	46	104
LV-FR-1C -10	10	8 AWG	7/1.35	0.7	1.4	8.8	1.72	65	150
LV-FR-1C -16	16	6 AWG	7/1.71	0.7	1.4	9.9	1.08	87	215
LV-FR-1C -25	25	4 AWG	7/2.13	0.9	1.5	11.2	0.690	118	308
LV-FR-1C -35	35	2 AWG	7/2.52	0.9	1.5	12.4	0.493	150	408
LV-FR-1C -50	50	1 AWG	19/1.83	1.0	1.6	14.4	0.345	184	567
LV-FR-1C -70	70	1/0 AWG	19/2.17	1.1	1.6	16.2	0.246	240	768
LV-FR-1C -95	95	2/0 AWG	19/2.52	1.1	1.6	18.0	0.181	300	1009
LV-FR-1C -120	120	3/0 AWG	19/2.84	1.2	1.7	20.0	0.144	355	1263
LV-FR-1C -150	150	4/0 AWG	37/2.27	1.4	1.8	22.3	0.115	415	1573
LV-FR-1C -185	185	250 kcmil	37/2.52	1.6	1.9	24.6	0.0932	480	1932
LV-FR-1C -240	240	300 kcmil	37/2.87	1.7	2.0	27.5	0.0718	575	2475
LV-FR-1C -300	300	350 kcmil	37/3.21	1.8	2.1	30.3	0.0575	665	3066
LV-FR-1C -400	400	500 kcmil	37/3.71	2.0	2.2	34.4	0.0431	790	4044
LV-FR-1C -500	500	600 kcmil	61/3.23	2.2	2.4	38.3	0.0345	920	5041
LV-FR-1C -630	630	750 kcmil	61/3.63	2.4	2.6	42.7	0.0274	1070	6325
LV-FR-1C -800	800	1000 kcmil	91/3.35	2.6	2.8	51.8	0.0216	1240	8354
LV-FR-1C -1000	1000	1250 kcmil	91/3.74	2.8	3.0	57.3	0.0172	1425	10377

VOLINIX

中压电力电缆系列

MEDIUM VOLTAGE POWER CABLE SERIES

章节概述 CHAPTER OVERVIEW:

本系列产品适用于5kV~35kV中压配电系统，用于城市电网、工业园区、矿山等中压电力传输。采用三层共挤XLPE绝缘结构，具有优良的电气性能和运行可靠性。提供100%和133%两种绝缘水平，可选铜、铝、铝合金导体及钢带/钢丝铠装结构。产品符合国际通用中压电缆标准。

This series is suitable for 5kV~35kV medium voltage distribution systems, used for power transmission in urban grids, industrial parks and mines. With triple co-extruded XLPE insulation, featuring excellent electrical performance and operational reliability. Available in 100% and 133% insulation levels, with Cu/Al/Al-alloy conductors and STA/SWA armor options. Compliant with international medium voltage cable standards.

5kV Cu/Al/Al-alloy/ XLPE/PVC Medium Voltage Power Cable
8kV Cu/Al/Al-alloy/ XLPE/PVC Medium Voltage Power Cable
15kV Cu/Al/Al-alloy/ XLPE/PVC Medium Voltage Power Cable
25kV Cu/Al/Al-alloy/ XLPE/PVC Medium Voltage Power Cable
35kV Cu/Al/Al-alloy/ XLPE/PVC Medium Voltage Power Cable

5KV 铜/铝/铝合金导体中压电力电缆

5KV CU/AL/AL-ALLOY/XLPE/PVC MEDIUM VOLTAGE POWER CABLE

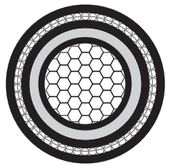



用途 Application

适用于5kV级中压配电系统，用于城市电网、工业园区、商业中心等中压输配电线路，可敷设于室内、电缆沟、管道及直埋

Suitable for 5kV medium voltage distribution systems in urban grids, industrial parks, commercial centers.

结构 Construction

铜/铝/铝合金导体，导体屏蔽，XLPE绝缘，绝缘屏蔽，铜带屏蔽，填充，包带，PVC外护套；可选用钢带铠装（STA）或钢丝铠装（SWA）提供机械保护；三层共挤绝缘系统确保电气性能

Cu/Al/Al-alloy conductor, conductor screen, cross-linked polyethylene (XLPE) insulation, insulation screen, copper tape screen, PVC sheath.

芯数规格 Core Config

可选类型：非铠装型、钢带铠装型（STA）、钢丝铠装型（SWA）；可选导体：铜、铝、铝合金；可选芯数：1芯、3芯；绝缘水平：100%、133%

Available types: Non-armored, STA, SWA; Conductor: Cu, Al, Al-alloy; Cores: 1C, 3C; Insulation level: 100%, 133%.

产品特性 Product Feature

XLPE绝缘电气性能优异，介质损耗低；导体长期工作温度90℃，短路温度250℃

Excellent electrical performance; 90℃ conductor temperature.

绝缘水平 Insulation Level	IEC电压 IEC U0/U	XLPE绝缘厚度 XLPE Insulation	适用系统 System Type
100%	3.6/6kV	2.5 mm	有效接地系统 Effectively Grounded
133%	3.6/6kV	3.4 mm	非有效接地系统 Non-Effectively Grounded

规格参数表 Specification Table

5KV · 100%绝缘水平 · 非铠装型中压电力电缆
5KV · 100% INSULATION LEVEL · NON-ARMORED MEDIUM VOLTAGE POWER CABLE

产品代号 Model No.	截面 mm^2	AWG/ kcmil	导体结构 Constr	绝缘厚度 Insul.mm	护套厚度 Jacket mm	近似外径 Dia. mm	载流量 Amp. A	近似重量 Wt. kg/km
MV-5-100-1C-25	25	4 AWG	7/2.14	2.5	1.8	17.2	130	512
MV-5-100-1C-35	35	2 AWG	7/2.52	2.5	1.8	18.4	160	622
MV-5-100-1C-50	50	1/0 AWG	19/1.80	2.5	1.8	19.8	200	781
MV-5-100-1C-70	70	2/0 AWG	19/2.16	2.5	1.8	21.6	260	990
MV-5-100-1C-95	95	3/0 AWG	19/2.52	2.5	1.8	23.4	330	1241
MV-5-100-1C-120	120	4/0 AWG	37/2.03	2.5	1.8	25.0	395	1488
MV-5-100-1C-150	150	250 MCM	37/2.27	2.5	1.8	26.7	460	1778
MV-5-100-1C-185	185	350 MCM	37/2.52	2.5	1.8	28.4	535	2113
MV-5-100-1C-240	240	500 MCM	61/2.25	2.5	1.8	29.1	645	2531
MV-5-100-1C-300	300	600 MCM	61/2.52	2.5	1.8	31.9	750	3123
MV-5-100-1C-400	400	800 MCM	61/2.89	2.5	1.8	35.6	880	4089
MV-5-100-1C-500	500	1000 MCM	61/3.20	2.5	1.8	38.8	1020	5049

5KV · 100%绝缘水平 · 钢带铠装型中压电力电缆
5KV · 100% INSULATION LEVEL · STEEL TAPE ARMORED MEDIUM VOLTAGE POWER CABLE

产品代号 Model No.	截面 mm^2	AWG/ kcmil	导体结构 Constr	绝缘厚度 Insul.mm	护套厚度 Jacket mm	近似外径 Dia. mm	载流量 Amp. A	近似重量 Wt. kg/km
MV-5-100-STA-1C-25	25	4 AWG	7/2.14	2.5	2.1	21.2	123	717
MV-5-100-STA-1C-35	35	2 AWG	7/2.52	2.5	2.1	22.4	152	871
MV-5-100-STA-1C-50	50	1/0 AWG	19/1.80	2.5	2.1	23.8	190	1093
MV-5-100-STA-1C-70	70	2/0 AWG	19/2.16	2.5	2.1	25.6	247	1386
MV-5-100-STA-1C-95	95	3/0 AWG	19/2.52	2.5	2.1	27.4	313	1737
MV-5-100-STA-1C-120	120	4/0 AWG	37/2.03	2.5	2.1	29.0	375	2083
MV-5-100-STA-1C-150	150	250 MCM	37/2.27	2.5	2.1	30.7	437	2489
MV-5-100-STA-1C-185	185	350 MCM	37/2.52	2.5	2.1	32.4	508	2958
MV-5-100-STA-1C-240	240	500 MCM	61/2.25	2.5	2.1	33.6	612	2648
MV-5-100-STA-1C-300	300	600 MCM	61/2.52	2.5	2.1	36.5	712	3248
MV-5-100-STA-1C-400	400	800 MCM	61/2.89	2.5	2.1	40.2	836	4224
MV-5-100-STA-1C-500	500	1000 MCM	61/3.20	2.5	2.1	43.4	969	5194

VOLINIX

规格参数表 Specification Table

5KV · 133%绝缘水平 · 非铠装型中压电力电缆
5KV · 133% INSULATION LEVEL · NON-ARMORED MEDIUM VOLTAGE POWER CABLE

产品代号 Model No.	截面 mm²	AWG/ kcmil	导体结构 Constr	绝缘厚度 Insul.mm	护套厚度 Jacket mm	近似外径 Dia. mm	载流量 Amp. A	近似重量 Wt. kg/km
MV-5-133-1C-25	25	4 AWG	7/2.14	3.4	1.8	16.8	130	442
MV-5-133-1C-35	35	2 AWG	7/2.52	3.4	1.8	18.0	160	552
MV-5-133-1C-50	50	1/0 AWG	19/1.80	3.4	1.8	19.4	200	711
MV-5-133-1C-70	70	2/0 AWG	19/2.16	3.4	1.8	21.2	260	922
MV-5-133-1C-95	95	3/0 AWG	19/2.52	3.4	1.8	23.0	330	1177
MV-5-133-1C-120	120	4/0 AWG	37/2.03	3.4	1.8	24.6	395	1428
MV-5-133-1C-150	150	250 MCM	37/2.27	3.4	1.8	26.3	460	1725
MV-5-133-1C-185	185	350 MCM	37/2.52	3.4	1.8	28.0	535	2068
MV-5-133-1C-240	240	500 MCM	61/2.25	3.4	1.8	30.7	645	2605
MV-5-133-1C-300	300	600 MCM	61/2.52	3.4	1.8	33.1	750	3183
MV-5-133-1C-400	400	800 MCM	61/2.89	3.4	1.8	36.4	880	4133
MV-5-133-1C-500	500	1000 MCM	61/3.20	3.4	1.8	39.2	1020	5073

5KV · 133%绝缘水平 · 钢带铠装型中压电力电缆
5KV · 133% INSULATION LEVEL · STEEL TAPE ARMORED MEDIUM VOLTAGE POWER CABLE

产品代号 Model No.	截面 mm²	AWG/ kcmil	导体结构 Constr	绝缘厚度 Insul.mm	护套厚度 Jacket mm	近似外径 Dia. mm	载流量 Amp. A	近似重量 Wt. kg/km
MV-5-133-STA-1C-25	25	4 AWG	7/2.14	3.4	2.1	20.9	123	526
MV-5-133-STA-1C-35	35	2 AWG	7/2.52	3.4	2.1	22.1	152	639
MV-5-133-STA-1C-50	50	1/0 AWG	19/1.80	3.4	2.1	23.5	190	803
MV-5-133-STA-1C-70	70	2/0 AWG	19/2.16	3.4	2.1	25.3	247	1019
MV-5-133-STA-1C-95	95	3/0 AWG	19/2.52	3.4	2.1	27.1	313	1280
MV-5-133-STA-1C-120	120	4/0 AWG	37/2.03	3.4	2.1	28.7	375	1537
MV-5-133-STA-1C-150	150	250 MCM	37/2.27	3.4	2.1	30.4	437	1839
MV-5-133-STA-1C-185	185	350 MCM	37/2.52	3.4	2.1	32.1	508	2188
MV-5-133-STA-1C-240	240	500 MCM	61/2.25	3.4	2.1	34.8	612	2733
MV-5-133-STA-1C-300	300	600 MCM	61/2.52	3.4	2.1	37.2	712	3318
MV-5-133-STA-1C-400	400	800 MCM	61/2.89	3.4	2.1	40.5	836	4279
MV-5-133-STA-1C-500	500	1000 MCM	61/3.20	3.4	2.1	43.3	969	5228

8KV 铜/铝/铝合金导体中压电力电缆

8KV Cu/Al/Al-alloy/XLPE/PVC Medium Voltage Power Cable

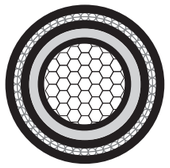



用途 Application

适用于8kV级中压配电系统，用于城市电网、工业园区、商业中心等中压输配电线路，可敷设于室内、电缆沟、管道及直埋

Suitable for 8kV medium voltage distribution systems in urban grids, industrial parks, commercial centers.

结构 Construction

铜/铝/铝合金导体，导体屏蔽，XLPE绝缘，绝缘屏蔽，铜带屏蔽，填充，包带，PVC外护套；可选用钢带铠装（STA）或钢丝铠装（SWA）提供机械保护；三层共挤绝缘系统确保电气性能

Cu/Al/Al-alloy conductor, conductor screen, cross-linked polyethylene (XLPE) insulation, insulation screen, copper tape screen, PVC sheath.

芯数规格 Core Config

可选类型：非铠装型、钢带铠装型（STA）、钢丝铠装型（SWA）；可选导体：铜、铝、铝合金；可选芯数：1芯、3芯；绝缘水平：100%、133%

Available types: Non-armored, STA, SWA; Conductor: Cu, Al, Al-alloy; Cores: 1C, 3C; Insulation level: 100%, 133%.

产品特性 Product Feature

XLPE绝缘电气性能优异，介质损耗低；导体长期工作温度90℃，短路温度250℃

Excellent electrical performance; 90℃ conductor temperature.

绝缘水平 Insulation Level	IEC电压 IEC U0/U	XLPE绝缘厚度 XLPE Insulation	适用系统 System Type
100%	6/10kV	3.4 mm	有效接地系统 Effectively Grounded
133%	6/10kV	4.5 mm	非有效接地系统 Non-Effectively Grounded

规格参数表 Specification Table

8KV · 100%绝缘水平 · 非铠装型中压电力电缆
8KV · 100% INSULATION LEVEL · NON-ARMORED MEDIUM VOLTAGE POWER CABLE

产品代号 Model No.	截面 mm^2	AWG/ kcmil	导体结构 Constr	绝缘厚度 Insul.mm	护套厚度 Jacket mm	近似外径 Dia. mm	载流量 Amp. A	近似重量 Wt. kg/km
MV-8-100-1C-25	25	4 AWG	7/2.14	3.4	1.8	19.0	130	575
MV-8-100-1C-35	35	2 AWG	7/2.52	3.4	1.8	20.2	160	687
MV-8-100-1C-50	50	1/0 AWG	19/1.80	3.4	1.8	21.6	200	848
MV-8-100-1C-70	70	2/0 AWG	19/2.16	3.4	1.8	23.4	260	1059
MV-8-100-1C-95	95	3/0 AWG	19/2.52	3.4	1.8	25.2	330	1313
MV-8-100-1C-120	120	4/0 AWG	37/2.03	3.4	1.8	26.8	395	1561
MV-8-100-1C-150	150	250 MCM	37/2.27	3.4	1.8	28.5	460	1853
MV-8-100-1C-185	185	350 MCM	37/2.52	3.4	1.8	30.2	535	2187
MV-8-100-1C-240	240	500 MCM	61/2.25	3.4	1.8	32.8	645	2711
MV-8-100-1C-300	300	600 MCM	61/2.52	3.4	1.8	35.3	750	3271
MV-8-100-1C-400	400	800 MCM	61/2.89	3.4	1.8	38.6	880	4187
MV-8-100-1C-500	500	1000 MCM	61/3.20	3.4	1.8	41.4	1020	5089

8KV · 100%绝缘水平 · 钢带铠装型中压电力电缆
8KV · 100% INSULATION LEVEL · NON-ARMORED MEDIUM VOLTAGE POWER CABLE

产品代号 Model No.	截面 mm^2	AWG/ kcmil	导体结构 Constr	绝缘厚度 Insul.mm	护套厚度 Jacket mm	近似外径 Dia. mm	载流量 Amp. A	近似重量 Wt. kg/km
MV-8-100-STA-1C-25	25	4 AWG	7/2.14	3.4	2.1	23.0	123	805
MV-8-100-STA-1C-35	35	2 AWG	7/2.52	3.4	2.1	24.2	152	962
MV-8-100-STA-1C-50	50	1/0 AWG	19/1.80	3.4	2.1	25.6	190	1187
MV-8-100-STA-1C-70	70	2/0 AWG	19/2.16	3.4	2.1	27.4	247	1483
MV-8-100-STA-1C-95	95	3/0 AWG	19/2.52	3.4	2.1	29.2	313	1838
MV-8-100-STA-1C-120	120	4/0 AWG	37/2.03	3.4	2.1	30.8	375	2185
MV-8-100-STA-1C-150	150	250 MCM	37/2.27	3.4	2.1	32.5	437	2594
MV-8-100-STA-1C-185	185	350 MCM	37/2.52	3.4	2.1	34.2	508	3062
MV-8-100-STA-1C-240	240	500 MCM	61/2.25	3.4	2.1	36.8	612	3795
MV-8-100-STA-1C-300	300	600 MCM	61/2.52	3.4	2.1	39.3	712	4579
MV-8-100-STA-1C-400	400	800 MCM	61/2.89	3.4	2.1	42.6	836	5862
MV-8-100-STA-1C-500	500	1000 MCM	61/3.20	3.4	2.1	45.4	969	7125

规格参数表 Specification Table

8KV · 133%绝缘水平 · 非铠装型中压电力电缆
8KV · 133% INSULATION LEVEL · NON-ARMORED MEDIUM VOLTAGE POWER CABLE

产品代号 Model No.	截面 mm^2	AWG/ kcmil	导体结构 Constr	绝缘厚度 Insul.mm	护套厚度 Jacket mm	近似外径 Dia. mm	载流量 Amp. A	近似重量 Wt. kg/km
MV-8-133-1C-25	25	4 AWG	7/2.14	4.5	1.8	21.2	130	614
MV-8-133-1C-35	35	2 AWG	7/2.52	4.5	1.8	22.4	160	734
MV-8-133-1C-50	50	1/0 AWG	19/1.80	4.5	1.8	23.8	200	905
MV-8-133-1C-70	70	2/0 AWG	19/2.16	4.5	1.8	25.6	260	1131
MV-8-133-1C-95	95	3/0 AWG	19/2.52	4.5	1.8	27.4	330	1401
MV-8-133-1C-120	120	4/0 AWG	37/2.03	4.5	1.8	29.0	395	1666
MV-8-133-1C-150	150	250 MCM	37/2.27	4.5	1.8	30.7	460	1978
MV-8-133-1C-185	185	350 MCM	37/2.52	4.5	1.8	32.4	535	2335
MV-8-133-1C-240	240	500 MCM	61/2.25	4.5	1.8	35.0	645	2894
MV-8-133-1C-300	300	600 MCM	61/2.52	4.5	1.8	37.5	750	3492
MV-8-133-1C-400	400	800 MCM	61/2.89	4.5	1.8	40.8	880	4469
MV-8-133-1C-500	500	1000 MCM	61/3.20	4.5	1.8	43.6	1020	5433

8KV · 133%绝缘水平 · 钢带铠装型中压电力电缆
8KV · 133% INSULATION LEVEL · STEEL TAPE ARMORED MEDIUM VOLTAGE POWER CABLE

产品代号 Model No.	截面 mm^2	AWG/ kcmil	导体结构 Constr	绝缘厚度 Insul.mm	护套厚度 Jacket mm	近似外径 Dia. mm	载流量 Amp. A	近似重量 Wt. kg/km
MV-8-133-STA-1C-25	25	4 AWG	7/2.14	4.5	2.1	25.2	123	860
MV-8-133-STA-1C-35	35	2 AWG	7/2.52	4.5	2.1	26.4	152	1028
MV-8-133-STA-1C-50	50	1/0 AWG	19/1.80	4.5	2.1	27.8	190	1267
MV-8-133-STA-1C-70	70	2/0 AWG	19/2.16	4.5	2.1	29.6	247	1583
MV-8-133-STA-1C-95	95	3/0 AWG	19/2.52	4.5	2.1	31.4	313	1961
MV-8-133-STA-1C-120	120	4/0 AWG	37/2.03	4.5	2.1	33.0	375	2332
MV-8-133-STA-1C-150	150	250 MCM	37/2.27	4.5	2.1	34.7	437	2769
MV-8-133-STA-1C-185	185	350 MCM	37/2.52	4.5	2.1	36.4	508	3269
MV-8-133-STA-1C-240	240	500 MCM	61/2.25	4.5	2.1	39.0	612	4052
MV-8-133-STA-1C-300	300	600 MCM	61/2.52	4.5	2.1	41.5	712	4889
MV-8-133-STA-1C-400	400	800 MCM	61/2.89	4.5	2.1	44.8	836	6257
MV-8-133-STA-1C-500	500	1000 MCM	61/3.20	4.5	2.1	47.6	969	7606

5kV Cu/Al/Al-alloy/XLPE/PVC Medium Voltage Power Cable
8kV Cu/Al/Al-alloy/XLPE/PVC Medium Voltage Power Cable
15kV Cu/Al/Al-alloy/XLPE/PVC Medium Voltage Power Cable
25kV Cu/Al/Al-alloy/XLPE/PVC Medium Voltage Power Cable
35kV Cu/Al/Al-alloy/XLPE/PVC Medium Voltage Power Cable

15KV 铜/铝/铝合金导体中压电力电缆

15KV Cu/Al/Al-alloy/XLPE/PVC Medium Voltage Power Cable

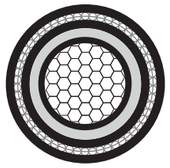



用途 Application

适用于15kV级中压配电系统，用于城市电网、工业园区、商业中心等中压输配电线路，可敷设于室内、电缆沟、管道及直埋

Suitable for 15kV medium voltage distribution systems in urban grids, industrial parks, commercial centers.

结构 Construction

铜/铝/铝合金导体，导体屏蔽，XLPE绝缘，绝缘屏蔽，铜带屏蔽，填充，包带，PVC外护套；可选用钢带铠装（STA）或钢丝铠装（SWA）提供机械保护；三层共挤绝缘系统确保电气性能

Cu/Al/Al-alloy conductor, conductor screen, cross-linked polyethylene (XLPE) insulation, insulation screen, copper tape screen, PVC sheath.

芯数规格 Core Config

可选类型：非铠装型、钢带铠装型（STA）、钢丝铠装型（SWA）；可选导体：铜、铝、铝合金；可选芯数：1芯、3芯；绝缘水平：100%、133%

Available types: Non-armored, STA, SWA; Conductor: Cu, Al, Al-alloy; Cores: 1C, 3C; Insulation level: 100%, 133%.

产品特性 Product Feature

XLPE绝缘电气性能优异，介质损耗低；导体长期工作温度90℃，短路温度250℃

Excellent electrical performance; 90℃ conductor temperature.

绝缘水平 Insulation Level	IEC电压 IEC U0/U	XLPE绝缘厚度 XLPE Insulation	适用系统 System Type
100%	8.7/15kV	4.5 mm	有效接地系统 Effectively Grounded
133%	8.7/15kV	5.5 mm	非有效接地系统 Non-Effectively Grounded

规格参数表 Specification Table

15KV · 100%绝缘水平 · 非铠装型中压电力电缆
15KV · 100% INSULATION LEVEL · NON-ARMORED MEDIUM VOLTAGE POWER CABLE

产品代号 Model No.	截面 mm²	AWG/ kcmil	导体结构 Constr	绝缘厚度 Insul.mm	护套厚度 Jacket mm	近似外径 Dia. mm	载流量 Amp. A	近似重量 Wt. kg/km
MV-15-100-1C-25	25	4 AWG	7/2.14	4.5	2.0	21.6	130	670
MV-15-100-1C-35	35	2 AWG	7/2.52	4.5	2.0	22.8	160	787
MV-15-100-1C-50	50	1/0 AWG	19/1.80	4.5	2.0	24.2	200	955
MV-15-100-1C-70	70	2/0 AWG	19/2.16	4.5	2.0	26.0	260	1175
MV-15-100-1C-95	95	3/0 AWG	19/2.52	4.5	2.0	27.8	330	1436
MV-15-100-1C-120	120	4/0 AWG	37/2.03	4.5	2.0	29.4	395	1692
MV-15-100-1C-150	150	250 MCM	37/2.27	4.5	2.0	31.1	460	1993
MV-15-100-1C-185	185	350 MCM	37/2.52	4.5	2.0	32.8	535	2336
MV-15-100-1C-240	240	500 MCM	61/2.25	4.5	2.0	35.5	645	2873
MV-15-100-1C-300	300	600 MCM	61/2.52	4.5	2.0	37.9	750	3447
MV-15-100-1C-400	400	800 MCM	61/2.89	4.5	2.0	41.2	880	4382
MV-15-100-1C-500	500	1000 MCM	61/3.20	4.5	2.0	44.0	1020	5302

15KV · 100%绝缘水平 · 钢带铠装型中压电力电缆
15KV · 100% INSULATION LEVEL · NON-ARMORED MEDIUM VOLTAGE POWER CABLE

产品代号 Model No.	截面 mm²	AWG/ kcmil	导体结构 Constr	绝缘厚度 Insul.mm	护套厚度 Jacket mm	近似外径 Dia. mm	载流量 Amp. A	近似重量 Wt. kg/km
MV-15-100-STA-1C-25	25	4 AWG	7/2.14	4.5	2.3	25.6	123	938
MV-15-100-STA-1C-35	35	2 AWG	7/2.52	4.5	2.3	26.8	152	1102
MV-15-100-STA-1C-50	50	1/0 AWG	19/1.80	4.5	2.3	28.2	190	1337
MV-15-100-STA-1C-70	70	2/0 AWG	19/2.16	4.5	2.3	30.0	247	1645
MV-15-100-STA-1C-95	95	3/0 AWG	19/2.52	4.5	2.3	31.8	313	2010
MV-15-100-STA-1C-120	120	4/0 AWG	37/2.03	4.5	2.3	33.4	375	2369
MV-15-100-STA-1C-150	150	250 MCM	37/2.27	4.5	2.3	35.1	437	2790
MV-15-100-STA-1C-185	185	350 MCM	37/2.52	4.5	2.3	36.8	508	3270
MV-15-100-STA-1C-240	240	500 MCM	61/2.25	4.5	2.3	39.5	612	4022
MV-15-100-STA-1C-300	300	600 MCM	61/2.52	4.5	2.3	41.9	712	4826
MV-15-100-STA-1C-400	400	800 MCM	61/2.89	4.5	2.3	45.2	836	6135
MV-15-100-STA-1C-500	500	1000 MCM	61/3.20	4.5	2.3	48.0	969	7423

VOLINIX

规格参数表 Specification Table

15KV · 133%绝缘水平 · 非铠装型中压电力电缆
15KV · 133% INSULATION LEVEL · NON-ARMORED MEDIUM VOLTAGE POWER CABLE

产品代号 Model No.	截面 mm²	AWG/ kcmil	导体结构 Constr	绝缘厚度 Insul.mm	护套厚度 Jacket mm	近似外径 Dia. mm	载流量 Amp. A	近似重量 Wt. kg/km
MV-15-133-1C-25	25	4 AWG	7/2.14	5.5	2.0	23.6	130	710
MV-15-133-1C-35	35	2 AWG	7/2.52	5.5	2.0	24.8	160	833
MV-15-133-1C-50	50	1/0 AWG	19/1.80	5.5	2.0	26.2	200	1010
MV-15-133-1C-70	70	2/0 AWG	19/2.16	5.5	2.0	28.0	260	1243
MV-15-133-1C-95	95	3/0 AWG	19/2.52	5.5	2.0	29.8	330	1520
MV-15-133-1C-120	120	4/0 AWG	37/2.03	5.5	2.0	31.4	395	1791
MV-15-133-1C-150	150	250 MCM	37/2.27	5.5	2.0	33.1	460	2109
MV-15-133-1C-185	185	350 MCM	37/2.52	5.5	2.0	34.8	535	2473
MV-15-133-1C-240	240	500 MCM	61/2.25	5.5	2.0	37.5	645	3041
MV-15-133-1C-300	300	600 MCM	61/2.52	5.5	2.0	39.9	750	3648
MV-15-133-1C-400	400	800 MCM	61/2.89	5.5	2.0	43.2	880	4638
MV-15-133-1C-500	500	1000 MCM	61/3.20	5.5	2.0	46.0	1020	5612

15KV · 133%绝缘水平 · 钢带铠装型中压电力电缆
15KV · 133% INSULATION LEVEL · STEEL TAPE ARMORED MEDIUM VOLTAGE POWER CABLE

产品代号 Model No.	截面 mm²	AWG/ kcmil	导体结构 Constr	绝缘厚度 Insul.mm	护套厚度 Jacket mm	近似外径 Dia. mm	载流量 Amp. A	近似重量 Wt. kg/km
MV-15-133-STA-1C-25	25	4 AWG	7/2.14	5.5	2.3	27.6	123	994
MV-15-133-STA-1C-35	35	2 AWG	7/2.52	5.5	2.3	28.8	152	1166
MV-15-133-STA-1C-50	50	1/0 AWG	19/1.80	5.5	2.3	30.2	190	1414
MV-15-133-STA-1C-70	70	2/0 AWG	19/2.16	5.5	2.3	32.0	247	1740
MV-15-133-STA-1C-95	95	3/0 AWG	19/2.52	5.5	2.3	33.8	313	2128
MV-15-133-STA-1C-120	120	4/0 AWG	37/2.03	5.5	2.3	35.4	375	2507
MV-15-133-STA-1C-150	150	250 MCM	37/2.27	5.5	2.3	37.1	437	2953
MV-15-133-STA-1C-185	185	350 MCM	37/2.52	5.5	2.3	38.8	508	3462
MV-15-133-STA-1C-240	240	500 MCM	61/2.25	5.5	2.3	41.5	612	4257
MV-15-133-STA-1C-300	300	600 MCM	61/2.52	5.5	2.3	43.9	712	5107
MV-15-133-STA-1C-400	400	800 MCM	61/2.89	5.5	2.3	47.2	836	6493
MV-15-133-STA-1C-500	500	1000 MCM	61/3.20	5.5	2.3	50.0	969	7857

05

5.1

中压电力电缆（5kV~35kV）

Medium Voltage Power Cables (5kV-35kV)

5kV Cu/Al/Al-alloy/XLPE/PVC Medium Voltage Power Cable

8kV Cu/Al/Al-alloy/XLPE/PVC Medium Voltage Power Cable

15kV Cu/Al/Al-alloy/XLPE/PVC Medium Voltage Power Cable

25kV Cu/Al/Al-alloy/XLPE/PVC Medium Voltage Power Cable

35kV Cu/Al/Al-alloy/XLPE/PVC Medium Voltage Power Cable

25KV 铜/铝/铝合金导体中压电力电缆

25KV Cu/Al/Al-alloy/XLPE/PVC Medium Voltage Power Cable

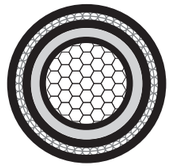



用途 Application

适用于25kV级中压配电系统，用于城市电网、工业园区、商业中心等中压输配电线路，可敷设于室内、电缆沟、管道及直埋

Suitable for 25kV medium voltage distribution systems in urban grids, industrial parks, commercial centers.

结构 Construction

铜/铝/铝合金导体，导体屏蔽，XLPE绝缘，绝缘屏蔽，铜带屏蔽，填充，包带，PVC外护套；可选用钢带铠装（STA）或钢丝铠装（SWA）提供机械保护；三层共挤绝缘系统确保电气性能

Cu/Al/Al-alloy conductor, conductor screen, cross-linked polyethylene (XLPE) insulation, insulation screen, copper tape screen, PVC sheath.

芯数规格 Core Config

可选类型：非铠装型、钢带铠装型（STA）、钢丝铠装型（SWA）；可选导体：铜、铝、铝合金；可选芯数：1芯、3芯；绝缘水平：100%、133%

Available types: Non-armored, STA, SWA; Conductor: Cu, Al, Al-alloy; Cores: 1C, 3C; Insulation level: 100%, 133%.

产品特性 Product Feature

XLPE绝缘电气性能优异，介质损耗低；导体长期工作温度90℃，短路温度250℃

Excellent electrical performance; 90℃ conductor temperature.

绝缘水平 Insulation Level	IEC电压 IEC U0/U	XLPE绝缘厚度 XLPE Insulation	适用系统 System Type
100%	18/30kV	8.0 mm	有效接地系统 Effectively Grounded
133%	18/30kV	10.5 mm	非有效接地系统 Non-Effectively Grounded

VOLINIX

规格参数表 Specification Table

25KV · 100%绝缘水平 · 非铠装型中压电力电缆
25KV · 100% INSULATION LEVEL · NON-ARMORED MEDIUM VOLTAGE POWER CABLE

产品代号 Model No.	截面 mm^2	AWG/ kcmil	导体结构 Constr	绝缘厚度 Insul.mm	护套厚度 Jacket mm	近似外径 Dia. mm	载流量 Amp. A	近似重量 Wt. kg/km
MV-25-100-1C-25	25	4 AWG	7/2.14	8.0	2.2	29.0	130	1100
MV-25-100-1C-35	35	2 AWG	7/2.52	8.0	2.2	30.2	160	1229
MV-25-100-1C-50	50	1/0 AWG	19/1.80	8.0	2.2	31.6	200	1410
MV-25-100-1C-70	70	2/0 AWG	19/2.16	8.0	2.2	33.4	260	1646
MV-25-100-1C-95	95	3/0 AWG	19/2.52	8.0	2.2	35.2	330	1923
MV-25-100-1C-120	120	4/0 AWG	37/2.03	8.0	2.2	36.8	395	2194
MV-25-100-1C-150	150	250 MCM	37/2.27	8.0	2.2	38.5	460	2505
MV-25-100-1C-185	185	350 MCM	37/2.52	8.0	2.2	40.2	535	2862
MV-25-100-1C-240	240	500 MCM	61/2.25	8.0	2.2	42.9	645	3416
MV-25-100-1C-300	300	600 MCM	61/2.52	8.0	2.2	45.3	750	4002
MV-25-100-1C-400	400	800 MCM	61/2.89	8.0	2.2	48.6	880	4950
MV-25-100-1C-500	500	1000 MCM	61/3.20	8.0	2.2	51.4	1020	5876

25KV · 100%绝缘水平 · 钢带铠装型中压电力电缆
25KV · 100% INSULATION LEVEL · NON-ARMORED MEDIUM VOLTAGE POWER CABLE

产品代号 Model No.	截面 mm^2	AWG/ kcmil	导体结构 Constr	绝缘厚度 Insul.mm	护套厚度 Jacket mm	近似外径 Dia. mm	载流量 Amp. A	近似重量 Wt. kg/km
MV-25-100-STA-1C-25	25	4 AWG	7/2.14	8.0	2.5	33.0	123	1540
MV-25-100-STA-1C-35	35	2 AWG	7/2.52	8.0	2.5	34.2	152	1721
MV-25-100-STA-1C-50	50	1/0 AWG	19/1.80	8.0	2.5	35.6	190	1974
MV-25-100-STA-1C-70	70	2/0 AWG	19/2.16	8.0	2.5	37.4	247	2304
MV-25-100-STA-1C-95	95	3/0 AWG	19/2.52	8.0	2.5	39.2	313	2692
MV-25-100-STA-1C-120	120	4/0 AWG	37/2.03	8.0	2.5	40.8	375	3072
MV-25-100-STA-1C-150	150	250 MCM	37/2.27	8.0	2.5	42.5	437	3507
MV-25-100-STA-1C-185	185	350 MCM	37/2.52	8.0	2.5	44.2	508	4007
MV-25-100-STA-1C-240	240	500 MCM	61/2.25	8.0	2.5	46.9	612	4782
MV-25-100-STA-1C-300	300	600 MCM	61/2.52	8.0	2.5	49.3	712	5603
MV-25-100-STA-1C-400	400	800 MCM	61/2.89	8.0	2.5	52.6	836	6930
MV-25-100-STA-1C-500	500	1000 MCM	61/3.20	8.0	2.5	55.4	969	8226

规格参数表 Specification Table

25KV · 133%绝缘水平 · 非铠装型中压电力电缆
25KV · 133% INSULATION LEVEL · NON-ARMORED MEDIUM VOLTAGE POWER CABLE

产品代号 Model No.	截面 mm^2	AWG/ kcmil	导体结构 Constr	绝缘厚度 Insul.mm	护套厚度 Jacket mm	近似外径 Dia. mm	载流量 Amp. A	近似重量 Wt. kg/km
MV-25-133-1C-25	25	4 AWG	7/2.14	10.5	2.2	34.0	130	1208
MV-25-133-1C-35	35	2 AWG	7/2.52	10.5	2.2	35.2	160	1349
MV-25-133-1C-50	50	1/0 AWG	19/1.80	10.5	2.2	36.6	200	1548
MV-25-133-1C-70	70	2/0 AWG	19/2.16	10.5	2.2	38.4	260	1808
MV-25-133-1C-95	95	3/0 AWG	19/2.52	10.5	2.2	40.2	330	2113
MV-25-133-1C-120	120	4/0 AWG	37/2.03	10.5	2.2	41.8	395	2409
MV-25-133-1C-150	150	250 MCM	37/2.27	10.5	2.2	43.5	460	2752
MV-25-133-1C-185	185	350 MCM	37/2.52	10.5	2.2	45.2	535	3143
MV-25-133-1C-240	240	500 MCM	61/2.25	10.5	2.2	47.9	645	3752
MV-25-133-1C-300	300	600 MCM	61/2.52	10.5	2.2	50.3	750	4396
MV-25-133-1C-400	400	800 MCM	61/2.89	10.5	2.2	53.6	880	5437
MV-25-133-1C-500	500	1000 MCM	61/3.20	10.5	2.2	56.4	1020	6454

25KV · 133%绝缘水平 · 钢带铠装型中压电力电缆
25KV · 133% INSULATION LEVEL · STEEL TAPE ARMORED MEDIUM VOLTAGE POWER CABLE

产品代号 Model No.	截面 mm^2	AWG/ kcmil	导体结构 Constr	绝缘厚度 Insul.mm	护套厚度 Jacket mm	近似外径 Dia. mm	载流量 Amp. A	近似重量 Wt. kg/km
MV-25-133-STA-1C-25	25	4 AWG	7/2.14	10.5	2.5	38.0	123	1691
MV-25-133-STA-1C-35	35	2 AWG	7/2.52	10.5	2.5	39.2	152	1889
MV-25-133-STA-1C-50	50	1/0 AWG	19/1.80	10.5	2.5	40.6	190	2167
MV-25-133-STA-1C-70	70	2/0 AWG	19/2.16	10.5	2.5	42.4	247	2531
MV-25-133-STA-1C-95	95	3/0 AWG	19/2.52	10.5	2.5	44.2	313	2958
MV-25-133-STA-1C-120	120	4/0 AWG	37/2.03	10.5	2.5	45.8	375	3373
MV-25-133-STA-1C-150	150	250 MCM	37/2.27	10.5	2.5	47.5	437	3853
MV-25-133-STA-1C-185	185	350 MCM	37/2.52	10.5	2.5	49.2	508	4400
MV-25-133-STA-1C-240	240	500 MCM	61/2.25	10.5	2.5	51.9	612	5253
MV-25-133-STA-1C-300	300	600 MCM	61/2.52	10.5	2.5	54.3	712	6154
MV-25-133-STA-1C-400	400	800 MCM	61/2.89	10.5	2.5	57.6	836	7612
MV-25-133-STA-1C-500	500	1000 MCM	61/3.20	10.5	2.5	60.4	969	9036

5kV Cu/Al/Al-alloy/XLPE/PVC Medium Voltage Power Cable
8kV Cu/Al/Al-alloy/XLPE/PVC Medium Voltage Power Cable
15kV Cu/Al/Al-alloy/XLPE/PVC Medium Voltage Power Cable
25kV Cu/Al/Al-alloy/XLPE/PVC Medium Voltage Power Cable
35kV Cu/Al/Al-alloy/XLPE/PVC Medium Voltage Power Cable

35KV 铜/铝/铝合金导体中压电力电缆

35KV Cu/Al/Al-alloy/XLPE/PVC Medium Voltage Power Cable

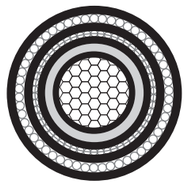



用途 Application

适用于35kV级中压配电系统，用于城市电网、工业园区、商业中心等中压输配电线路，可敷设于室内、电缆沟、管道及直埋

Suitable for 35kV medium voltage distribution systems in urban grids, industrial parks, commercial centers.

结构 Construction

铜/铝/铝合金导体，导体屏蔽，XLPE绝缘，绝缘屏蔽，铜带屏蔽，填充，包带，PVC外护套；可选用钢带铠装（STA）或钢丝铠装（SWA）提供机械保护；三层共挤绝缘系统确保电气性能

Cu/Al/Al-alloy conductor, conductor screen, cross-linked polyethylene (XLPE) insulation, insulation screen, copper tape screen, PVC sheath.

芯数规格 Core Config

可选类型：非铠装型、钢带铠装型（STA）、钢丝铠装型（SWA）；可选导体：铜、铝、铝合金；可选芯数：1芯、3芯；绝缘水平：100%、133%

Available types: Non-armored, STA, SWA; Conductor: Cu, Al, Al-alloy; Cores: 1C, 3C; Insulation level: 100%, 133%.

产品特性 Product Feature

XLPE绝缘电气性能优异，介质损耗低；导体长期工作温度90℃，短路温度250℃

Excellent electrical performance; 90℃ conductor temperature.

绝缘水平 Insulation Level	IEC电压 IEC U0/U	XLPE绝缘厚度 XLPE Insulation	适用系统 System Type
100%	26/35kV	10.5 mm	有效接地系统 Effectively Grounded
133%	26/35kV	14.0 mm	非有效接地系统 Non-Effectively Grounded

规格参数表 Specification Table

35KV · 100%绝缘水平 · 非铠装型中压电力电缆
35KV · 100% INSULATION LEVEL · NON-ARMORED MEDIUM VOLTAGE POWER CABLE

产品代号 Model No.	截面 mm^2	AWG/ kcmil	导体结构 Constr	绝缘厚度 Insul.mm	护套厚度 Jacket mm	近似外径 Dia. mm	载流量 Amp. A	近似重量 Wt. kg/km
MV-35-100-1C-25	25	4 AWG	7/2.14	10.5	2.4	34.4	130	1504
MV-35-100-1C-35	35	2 AWG	7/2.52	10.5	2.4	35.6	160	1641
MV-35-100-1C-50	50	1/0 AWG	19/1.80	10.5	2.4	37.0	200	1835
MV-35-100-1C-70	70	2/0 AWG	19/2.16	10.5	2.4	38.8	260	2088
MV-35-100-1C-95	95	3/0 AWG	19/2.52	10.5	2.4	40.6	330	2381
MV-35-100-1C-120	120	4/0 AWG	37/2.03	10.5	2.4	42.2	395	2664
MV-35-100-1C-150	150	250 MCM	37/2.27	10.5	2.4	43.9	460	2991
MV-35-100-1C-185	185	350 MCM	37/2.52	10.5	2.4	45.6	535	3362
MV-35-100-1C-240	240	500 MCM	61/2.25	10.5	2.4	48.2	645	3936
MV-35-100-1C-300	300	600 MCM	61/2.52	10.5	2.4	50.7	750	4543
MV-35-100-1C-400	400	800 MCM	61/2.89	10.5	2.4	54.0	880	5516
MV-35-100-1C-500	500	1000 MCM	61/3.20	10.5	2.4	56.8	1020	6462

35KV · 100%绝缘水平 · 钢带铠装型中压电力电缆
35KV · 100% INSULATION LEVEL · NON-ARMORED MEDIUM VOLTAGE POWER CABLE

产品代号 Model No.	截面 mm^2	AWG/ kcmil	导体结构 Constr	绝缘厚度 Insul.mm	护套厚度 Jacket mm	近似外径 Dia. mm	载流量 Amp. A	近似重量 Wt. kg/km
MV-35-100-STA-1C-25	25	4 AWG	7/2.14	10.5	2.7	38.4	123	2106
MV-35-100-STA-1C-35	35	2 AWG	7/2.52	10.5	2.7	39.6	152	2297
MV-35-100-STA-1C-50	50	1/0 AWG	19/1.80	10.5	2.7	41.0	190	2569
MV-35-100-STA-1C-70	70	2/0 AWG	19/2.16	10.5	2.7	42.8	247	2923
MV-35-100-STA-1C-95	95	3/0 AWG	19/2.52	10.5	2.7	44.6	313	3333
MV-35-100-STA-1C-120	120	4/0 AWG	37/2.03	10.5	2.7	46.2	375	3730
MV-35-100-STA-1C-150	150	250 MCM	37/2.27	10.5	2.7	47.9	437	4187
MV-35-100-STA-1C-185	185	350 MCM	37/2.52	10.5	2.7	49.6	508	4707
MV-35-100-STA-1C-240	240	500 MCM	61/2.25	10.5	2.7	52.2	612	5510
MV-35-100-STA-1C-300	300	600 MCM	61/2.52	10.5	2.7	54.7	712	6360
MV-35-100-STA-1C-400	400	800 MCM	61/2.89	10.5	2.7	58.0	836	7722
MV-35-100-STA-1C-500	500	1000 MCM	61/3.20	10.5	2.7	60.8	969	9047

规格参数表 Specification Table

35KV · 133%绝缘水平 · 非铠装型中压电力电缆
35KV · 133% INSULATION LEVEL · NON-ARMORED MEDIUM VOLTAGE POWER CABLE

产品代号 Model No.	截面 mm^2	AWG/ kcmil	导体结构 Constr	绝缘厚度 Insul.mm	护套厚度 Jacket mm	近似外径 Dia. mm	载流量 Amp. A	近似重量 Wt. kg/km
MV-35-133-1C-25	25	4 AWG	7/2.14	14.0	2.4	41.4	130	1665
MV-35-133-1C-35	35	2 AWG	7/2.52	14.0	2.4	42.6	160	1818
MV-35-133-1C-50	50	1/0 AWG	19/1.80	14.0	2.4	44.0	200	2033
MV-35-133-1C-70	70	2/0 AWG	19/2.16	14.0	2.4	45.8	260	2313
MV-35-133-1C-95	95	3/0 AWG	19/2.52	14.0	2.4	47.6	330	2637
MV-35-133-1C-120	120	4/0 AWG	37/2.03	14.0	2.4	49.2	395	2951
MV-35-133-1C-150	150	250 MCM	37/2.27	14.0	2.4	50.9	460	3313
MV-35-133-1C-185	185	350 MCM	37/2.52	14.0	2.4	52.6	535	3723
MV-35-133-1C-240	240	500 MCM	61/2.25	14.0	2.4	55.2	645	4360
MV-35-133-1C-300	300	600 MCM	61/2.52	14.0	2.4	57.7	750	5032
MV-35-133-1C-400	400	800 MCM	61/2.89	14.0	2.4	61.0	880	6109
MV-35-133-1C-500	500	1000 MCM	61/3.20	14.0	2.4	63.8	1020	7157

35KV · 133%绝缘水平 · 钢带铠装型中压电力电缆
35KV · 133% INSULATION LEVEL · STEEL TAPE ARMORED MEDIUM VOLTAGE POWER CABLE

产品代号 Model No.	截面 mm^2	AWG/ kcmil	导体结构 Constr	绝缘厚度 Insul.mm	护套厚度 Jacket mm	近似外径 Dia. mm	载流量 Amp. A	近似重量 Wt. kg/km
MV-35-133-STA-1C-25	25	4 AWG	7/2.14	14.0	2.7	45.4	123	2331
MV-35-133-STA-1C-35	35	2 AWG	7/2.52	14.0	2.7	46.6	152	2545
MV-35-133-STA-1C-50	50	1/0 AWG	19/1.80	14.0	2.7	48.0	190	2846
MV-35-133-STA-1C-70	70	2/0 AWG	19/2.16	14.0	2.7	49.8	247	3238
MV-35-133-STA-1C-95	95	3/0 AWG	19/2.52	14.0	2.7	51.6	313	3692
MV-35-133-STA-1C-120	120	4/0 AWG	37/2.03	14.0	2.7	53.2	375	4131
MV-35-133-STA-1C-150	150	250 MCM	37/2.27	14.0	2.7	54.9	437	4638
MV-35-133-STA-1C-185	185	350 MCM	37/2.52	14.0	2.7	56.6	508	5212
MV-35-133-STA-1C-240	240	500 MCM	61/2.25	14.0	2.7	59.2	612	6104
MV-35-133-STA-1C-300	300	600 MCM	61/2.52	14.0	2.7	61.7	712	7045
MV-35-133-STA-1C-400	400	800 MCM	61/2.89	14.0	2.7	65.0	836	8553
MV-35-133-STA-1C-500	500	1000 MCM	61/3.20	14.0	2.7	67.8	969	10020

VOLINIX

VOLINIX

高压电力电缆系列

HIGH VOLTAGE POWER CABLE SERIES

章节概述 CHAPTER OVERVIEW:

本系列产品适用于64/110kV高压输电系统，用于城市主干电网、大型电站引出线等高压电力传输。采用优质XLPE绝缘和皱纹铝套防水结构，具有优良的电气性能、机械性能和防水性能。产品符合国际通用高压电缆标准。

This series is suitable for 64/110kV high voltage transmission systems, used for urban main power grids and large power station outlets. With high-quality XLPE insulation and corrugated aluminum sheath waterproof structure, featuring excellent electrical, mechanical and waterproof properties. Compliant with international high voltage cable standards.

64/110KV CU/XLPE 高压电力电缆
64/110KV CU/XLPE HIGH VOLTAGE POWER CABLE

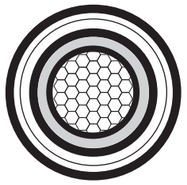



用途 Application

适用于110kV高压输配电系统，用于城市电网主干线、变电站进出线、大型工业园区供电等高压输电线路

Suitable for 110kV high voltage transmission and distribution systems, urban grid main lines, substation feeders.

结构 Construction

铜导体，导体屏蔽，XLPE绝缘，绝缘屏蔽，半导电缓冲层，皱纹铝套，沥青防腐层，PE外护套；完整的高压电缆结构

Copper conductor, conductor screen, cross-linked polyethylene (XLPE) insulation, insulation screen, semi-conductive buffer, corrugated aluminum sheath, PE sheath.

芯数规格 Core Config

单芯结构；截面范围240~2000mm²；可根据输送容量选择不同截面

Single core; 240~2000mm²; Selectable cross-section based on transmission capacity.

产品特性 Product Feature

符合相关标准；XLPE绝缘电气性能优异，介质损耗低；皱纹铝套防水、机械强度优异；导体长期工作温度90℃

Meets relevant standards / ; Excellent electrical performance; Corrugated aluminum sheath for waterproofing.

规格参数表 Specification Table

产品代号 Model No.	截面 mm²	导体结构 Constr.	绝缘厚度 Insul. mm	铝套厚度 Al. Sheath mm	近似外径 Dia. mm	直流电阻 Ω/km	载流量 Amp. A	近似重量 Wt. kg/km
HV-110KV -1C-240	240	61/2.25	16.0	2.0	68.2	0.0754	600	6163
HV-110KV -1C-300	300	61/2.52	16.0	2.0	70.7	0.0601	672	6906
HV-110KV -1C-400	400	61/2.89	16.0	2.0	74.0	0.0470	792	8083
HV-110KV -1C-500	500	91/2.65	16.0	2.0	78.0	0.0366	912	9713
HV-110KV -1C-630	630	91/3.00	16.0	2.0	141.0	0.0283	1068	15726
HV-110KV -1C-800	800	127/2.83	16.0	2.0	169.7	0.0221	1272	19643
HV-110KV -1C-1000	1000	127/3.17	16.0	2.0	184.3	0.0176	1512	22661
HV-110KV -1C-1200	1200	169/3.00	16.0	2.0	219.0	0.0147	1752	27347
HV-110KV -1C-1600	1600	217/3.07	16.0	2.0	272.1	0.0110	2232	35366
HV-110KV -1C-2000	2000	271/3.07	16.0	2.0	327.4	0.00880	2712	43565

VOLINIX

架空裸导体线缆

Overhead Bare Conductors

章节概述 CHAPTER OVERVIEW：

本系列产品用于架空电力传输、配电线路及接地、避雷等场景，采用高纯度金属导体经正规同心绞合工艺制成，具备优异的导电性能、机械强度与环境耐候性，适配户外长期运行工况。

This series of products are used in overhead power transmission, distribution lines, grounding and lightning protection scenarios. Made of high-purity metal conductors through standard concentric stranding process, they have excellent conductivity, mechanical strength and environmental weather resistance, suitable for long-term outdoor operation.

Solid Conductor AAC All-Aluminum Overhead Bare Conductor

ACSR Aluminum Conductor Steel Reinforced

AAAC All-Aluminum Alloy Conductor

ACAR Aluminum Conductor Alloy Reinforced

ACSS Aluminum Conductor Steel Supported

AW Aluminum -Clad Steel Wire

Solid Conductor TBC Hard Drawn Copper Conductor

GW Galvanized Steel Ground Wire

全铝架空裸导体AAC 实心导体
Solid Conductor AAC All-Aluminum Overhead Bare Conductor

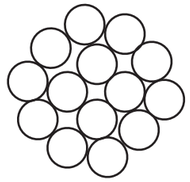



用途 Application

用于架空电力传输与配电线路，也可作为接地、跳线等无绝缘连接导体，适配户外架空敷设场景

Used for overhead power transmission and distribution lines, also applied as uninsulated connection conductors such as grounding wires and jumpers, suitable for outdoor overhead laying scenarios.

结构 Construction

采用硬拉制高纯铝单线，按同心正规绞合工艺绞合而成，分为实心与多股绞合两种结构，单线直径、绞合根数严格参照标准图纸，整体结构紧密、导电性能优异

Adopts hard drawn high-purity aluminum single wires, stranded with standard concentric stranding process. Available in solid and multi-stranded structures, the single wire diameter and stranding quantity strictly follow standard drawings, with compact overall structure and excellent conductivity.

产品特性 Product Feature

导电性能优异，传输损耗低；重量轻、架设便捷；耐候性强，适配户外大气环境，是架空配电线路的通用经济型导体

Excellent conductivity with low transmission loss. Light weight and convenient for installation. Strong weather resistance, adapting to outdoor atmospheric environment, it is a general economical conductor for overhead distribution lines.

规格参数表 Specification Table

实心导体 Solid Conducto

产品型号 Model No.	标称截面 Nominal Section (mm²)	对应规格 AWG / MCM	导体结构 Conductor Structure	单线直径 d (mm)	导体外径 Conductor OD (mm)	标称重量 Nominal Weight (kg/km)	20℃最大直流电阻 Max DC Resistance @20℃ (Ω/km)
BARE-AAC -5.3-S	5.3	10 AWG	1×2.60 mm	2.60	2.60	14.22	5.3
BARE-AAC -8.0-S	8.0	8 AWG	1×3.20 mm	3.20	3.20	22.62	3.5
BARE-AAC -13.3-S	13.3	6 AWG	1×4.115 mm	4.115	4.115	35.94	2.12
BARE-AAC -21.2-S	21.2	4 AWG	1×5.189 mm	5.189	5.189	57.17	1.33

绞合导体Twisted conductor

产品型号 Model No.	标称截面 Nominal Section (mm²)	对应规格 AWG / MCM	导体结构 Conductor Structure	单线直径 d (mm)	导体外径 Conductor OD (mm)	标称重量 Nominal Weight (kg/km)	20℃最大直流电阻 Max DC Resistance @20℃ (Ω/km)
BARE-AAC -2.0-7	2.0	14 AWG	7×0.60 mm	0.60	1.80	10.88	14.50
BARE-AAC -3.5-7	3.5	12 AWG	7×0.80 mm	0.80	2.40	19.05	8.29
BARE-AAC -5.5-7	5.5	10 AWG	7×1.00 mm	1.00	3.00	29.92	5.28
BARE-AAC -8.0-7	8.0	8 AWG	7×1.20 mm	1.20	3.60	45.50	3.47
BARE-AAC -14-7	14	6 AWG	7×1.60 mm	1.60	4.80	76.40	2.07
BARE-AAC -22-7	22	4 AWG	7×2.00 mm	2.00	6.00	120.10	1.32
BARE-AAC -30-7	30	2 AWG	7×2.30 mm	2.30	6.90	163.80	0.966
BARE-AAC -38-19	38	1 AWG	19×1.60 mm	1.60	8.00	207.20	0.764
BARE-AAC -50-19	50	1/0 AWG	19×1.80 mm	1.80	9.00	272.50	0.581
BARE-AAC -60-19	60	2/0 AWG	19×2.00 mm	2.00	10.00	343.80	0.461
BARE-AAC -80-19	80	3/0 AWG	19×2.30 mm	2.30	11.50	458.40	0.346
BARE-AAC -100-19	100	4/0 AWG	19×2.60 mm	2.60	13.00	585.00	0.271
BARE-AAC -125-37	125	250 MCM	37×2.10 mm	2.10	14.70	732.00	0.216
BARE-AAC -150-37	150	300 MCM	37×2.30 mm	2.30	16.10	878.00	0.180
BARE-AAC -200-37	200	400 MCM	37×2.60 mm	2.60	18.20	1171.00	0.135
BARE-AAC -250-61	250	500 MCM	61×2.30 mm	2.30	20.70	1464.00	0.108
BARE-AAC -325-61	325	650 MCM	61×2.60 mm	2.60	23.40	1903.00	0.083
BARE-AAC -400-61	400	800 MCM	61×2.90 mm	2.90	26.10	2342.00	0.068
BARE-AAC -500-61	500	1000 MCM	61×3.20 mm	3.20	28.80	2928.00	0.054

Solid Conductor
AAC All-Aluminum Overhead Bare Conductor

ACSR Aluminum Conductor Steel Reinforced

AAAC All-Aluminum Alloy Conductor

ACAR Aluminum Conductor Alloy Reinforced

ACSS Aluminum Conductor Steel Supported

AW Aluminum -Clad Steel Wire

Solid Conductor TBC Hard Drawn Copper Conductor

GW Galvanized Steel Ground Wire

ACSR 钢芯铝绞线架空裸导体
ACSR Aluminum Conductor Steel Reinforced

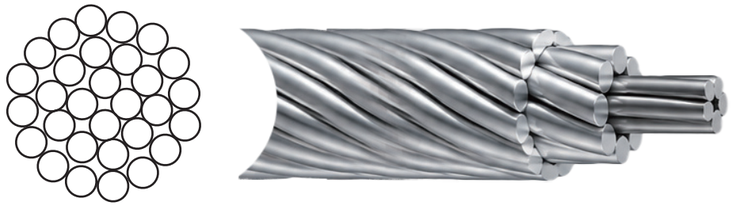

用途 Application

用于架空高压输配电线路，尤其适合大跨度、高张力架设场景，是长距离输电干线的主流导体选型

Used for overhead high-voltage power transmission and distribution lines, especially suitable for long-span and high-tension installation scenarios. It is the mainstream conductor selection for long-distance transmission trunk lines.

结构 Construction

采用多层硬拉制高纯铝线绞合，中心设置镀锌钢丝加强芯，铝线与钢线同步正规绞合；整体抗拉强度高、结构稳定

Adopts multi-layer hard drawn high-purity aluminum wires stranded, with galvanized steel wire reinforced core in the center. Aluminum wires and steel wire are synchronously stranded with standard process, with high overall tensile strength and stable structure.

产品特性 Product Feature

导电性能优异，传输容量大；钢芯增强大幅提升抗拉强度，支持大跨度架设，减少杆塔用量；耐候性与抗老化性能突出，适配户外复杂气候与地理环境

Excellent conductivity with large transmission capacity. Steel core reinforcement greatly improves tensile strength, supporting long-span installation and reducing tower quantity. Outstanding weather resistance and aging resistance, adapting to complex outdoor climate and geographical environment.

规格参数表 Specification Table

实心导体 Solid Conducto

产品型号 Model No.	标称截面 Nominal Section (mm^2)	对应规格 AWG / MCM	导体结构 Conductor Structure	铝单线 d (mm)	钢单线 d (mm)	导体外径 Conductor OD (mm)	标称重量 Nominal Weight (kg/km)	20℃最大直流电阻 Max DC Resistance @20℃ (Ω/km)
BARE-ACSR -2.0-61	2.0	14 AWG	6×0.65 mm Al + 1×0.65 mm Steel	0.65	0.65	1.95	15.80	16.20
BARE-ACSR -3.5-61	3.5	12 AWG	6×0.86 mm Al + 1×0.86 mm Steel	0.86	0.86	2.58	27.70	9.24
BARE-ACSR -5.5-61	5.5	10 AWG	6×1.08 mm Al + 1×1.08 mm Steel	1.08	1.08	3.24	43.50	5.88
BARE-ACSR -8.0-61	8.0	8 AWG	6×1.30 mm Al + 1×1.30 mm Steel	1.30	1.30	3.90	66.20	3.86
BARE-ACSR -14-61	14	6 AWG	6×1.70 mm Al + 1×1.70 mm Steel	1.70	1.70	5.10	113.40	2.30
BARE-ACSR -22-61	22	4 AWG	6×2.14 mm Al + 1×2.14 mm Steel	2.14	2.14	6.42	178.60	1.47
BARE-ACSR -30-61	30	2 AWG	6×2.50 mm Al + 1×2.50 mm Steel	2.50	2.50	7.50	243.80	1.08
BARE-ACSR -38-61	38	1 AWG	6×2.84 mm Al + 1×2.84 mm Steel	2.84	2.84	8.52	315.00	0.842
BARE-ACSR -50-61	50	1/0 AWG	6×3.26 mm Al + 1×3.26 mm Steel	3.26	3.26	9.78	415.60	0.638
BARE-ACSR -60-61	60	2/0 AWG	6×3.57 mm Al + 1×3.57 mm Steel	3.57	3.57	10.71	498.20	0.532
BARE-ACSR -80-61	80	3/0 AWG	6×4.12 mm Al + 1×4.12 mm Steel	4.12	4.12	12.36	664.40	0.399
BARE-ACSR -100-61	100	4/0 AWG	6×4.62 mm Al + 1×4.62 mm Steel	4.62	4.62	13.86	835.00	0.317
BARE-ACSR -125-181	125	250 MCM	18×2.97 mm Al + 1×2.97 mm Steel	2.97	2.97	14.85	890.00	0.255
BARE-ACSR -150-247	150	300 MCM	24×2.82 mm Al + 7×1.61 mm Steel	2.82	1.61	14.10	1120.00	0.210
BARE-ACSR -200-267	200	400 MCM	26×3.13 mm Al + 7×1.82 mm Steel	3.13	1.82	15.65	1480.00	0.160
BARE-ACSR -250-307	250	500 MCM	30×3.26 mm Al + 7×2.30 mm Steel	3.26	2.30	16.30	1850.00	0.128
BARE-ACSR -325-427	325	650 MCM	42×3.13 mm Al + 7×2.62 mm Steel	3.13	2.62	16.65	2410.00	0.099
BARE-ACSR -400-457	400	800 MCM	45×3.36 mm Al + 7×3.02 mm Steel	3.36	3.02	16.80	2970.00	0.081
BARE-ACSR -500-547	500	1000 MCM	54×3.43 mm Al + 7×3.43 mm Steel	3.43	3.43	17.15	3710.00	0.065

Solid Conductor
AAC All-Aluminum
Overhead Bare
Conductor

ACSR
Aluminum
Conductor
Steel Reinforced

AAAC
All-Aluminum
Alloy Conductor

ACAR
Aluminum
Conductor
Alloy Reinforced

ACSS
Aluminum
Conductor Steel
Supported

AW Aluminum
-Clad Steel Wire

Solid Conductor
TBC Hard Drawn
Copper Conductor

GW Galvanized
Steel Ground Wire

AAAC 铝合金架空裸导体
AAAC All-Aluminum Alloy Conductor

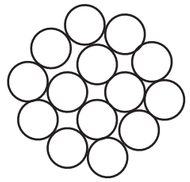



用途 Application

用于中低压配电主干线及高腐蚀环境线路，也可用于中高压输电线路，兼顾强度、导电与耐腐性能

Used for medium and low voltage distribution trunk lines and lines in high corrosion environments, also applicable to medium and high voltage transmission lines, balancing strength, conductivity and corrosion resistance.

结构 Construction

全部由 8000 系铝合金单线经同心正规绞合工艺制成，单线直径、股数遵循标准图纸，均质导体无钢芯，整体结构紧密、机械强度优异

All made of 8000 series aluminum alloy single wires through standard concentric stranding process. Single wire diameter and quantity comply with standard drawings, homogeneous conductor without steel core, with compact overall structure and excellent mechanical strength.

产品特性 Product Feature

抗拉强度显著高于纯铝绞线，重量远轻于钢芯铝绞线；耐腐蚀、抗蠕变性能优异，无磁滞损耗弧垂特性优异，同截面下荷载更小

Tensile strength is significantly higher than pure aluminum strands, and weight is much lighter than ACSR. Excellent corrosion resistance and creep resistance, no hysteresis loss. Excellent sag characteristics with lower load under the same section.

规格参数表 Specification Table

实心导体 Solid Conducto

产品型号 Model No.	标称截面 Nominal Section (mm²)	对应规格 AWG / MCM	导体结构 Conductor Structure	单线直径 d (mm)	导体外径 Conductor OD (mm)	标称重量 Nominal Weight (kg/km)	20℃最大直流电阻 Max DC Resistance @20℃ (Ω/km)
BARE-AAAC -14-7	14	6 AWG	7×1.60 mm	1.60	4.80	78.20	2.32
BARE-AAAC -22-7	22	4 AWG	7×2.00 mm	2.00	6.00	122.90	1.48
BARE-AAAC -30-7	30	2 AWG	7×2.30 mm	2.30	6.90	167.60	1.08
BARE-AAAC -38-19	38	1 AWG	19×1.60 mm	1.60	8.00	212.00	0.855
BARE-AAAC -50-19	50	1/0 AWG	19×1.80 mm	1.80	9.00	278.80	0.650
BARE-AAAC -60-19	60	2/0 AWG	19×2.00 mm	2.00	10.00	352.00	0.516
BARE-AAAC -80-19	80	3/0 AWG	19×2.30 mm	2.30	11.50	469.00	0.387
BARE-AAAC -100-19	100	4/0 AWG	19×2.60 mm	2.60	13.00	598.00	0.303
BARE-AAAC -125-37	125	250 MCM	37×2.10 mm	2.10	14.70	748.00	0.240
BARE-AAAC -150-37	150	300 MCM	37×2.30 mm	2.30	16.10	898.00	0.202
BARE-AAAC -200-37	200	400 MCM	37×2.60 mm	2.60	18.20	1197.00	0.151
BARE-AAAC -250-61	250	500 MCM	61×2.30 mm	2.30	20.70	1497.00	0.121
BARE-AAAC -325-61	325	650 MCM	61×2.60 mm	2.60	23.40	1946.00	0.093
BARE-AAAC -400-61	400	800 MCM	61×2.90 mm	2.90	26.10	2395.00	0.076
BARE-AAAC -500-61	500	1000 MCM	61×3.20 mm	3.20	28.80	2990.00	0.061

ACAR 铝合金芯铝绞线架空裸导体
ACAR Aluminum Conductor Alloy Reinforced

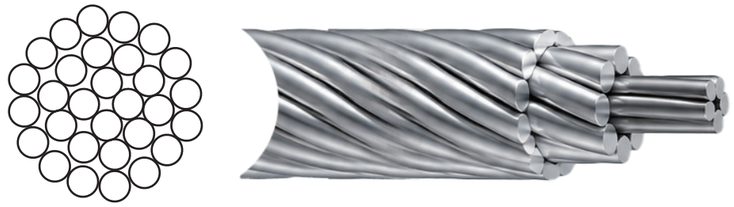

用途 Application

用于中高压配电与输电线路，尤其适合腐蚀较强的场景，可替代同截面钢芯铝绞线降低杆塔荷载

Used for medium and high voltage distribution and transmission lines, especially suitable for scenarios with strong corrosion. It can replace ACSR of the same section to reduce tower load.

结构 Construction

外层为电工纯铝单线，芯部由高强度铝合金线绞合作为加强芯，整体正规绞合成型；加强芯同步参与导电

The outer layer is electrical pure aluminum single wires, and the core is stranded with high-strength aluminum alloy wires as reinforcement core, integrally formed by standard stranding. The reinforcement core synchronously participates in conduction.

产品特性 Product Feature

导电性能优于同截面钢芯铝绞线，整体重量更轻；耐腐蚀性能优异，无磁滞损耗；抗拉强度高于纯铝绞线，机械特性均衡

Better conductivity than ACSR of the same section with lighter overall weight. Excellent corrosion resistance without hysteresis loss. Higher tensile strength than pure aluminum strands with balanced mechanical characteristics.

规格参数表 Specification Table

实心导体 Solid Conducto

产品型号 Model No.	标称截面 Nominal Section (mm^2)	对应规格 AWG / MCM	导体结构 Conductor Structure	铝单线 d (mm)	合金芯 d (mm)	导体外径 Conductor OD (mm)	标称重量 Nominal Weight (kg/km)	20℃最大直流电阻 Max DC Resistance @20℃ (Ω/km)
BARE-ACAR -22-61	22	4 AWG	6×2.14 mm Al + 1×2.14 mm Alloy	2.14	2.14	6.42	171.50	1.41
BARE-ACAR -30-61	30	2 AWG	6×2.50 mm Al + 1×2.50 mm Alloyl	2.50	2.50	7.50	236.50	1.01
BARE-ACAR -38-61	38	1 AWG	6×2.84 mm Al + 1×2.84 mm Alloy	2.84	2.84	8.52	305.20	0.794
BARE-ACAR -50-61	50	1/0 AWG	6×3.26 mm Al + 1×3.26 mm Alloy	3.26	3.26	9.78	403.00	0.598
BARE-ACAR -60-61	60	2/0 AWG	6×3.57 mm Al + 1×3.57 mm Alloy	3.57	3.57	10.71	483.50	0.499
BARE-ACAR -80-61	80	3/0 AWG	6×4.12 mm Al + 1×4.12 mm Alloy	4.12	4.12	12.36	645.00	0.374
BARE-ACAR -100-61	100	4/0 AWG	6×4.62 mm Al + 1×4.62 mm Alloy	4.62	4.62	13.86	810.00	0.297
BARE-ACAR -150-181	150	300 MCM	18×3.26 mm Al + 1×3.26 mm Alloy	3.26	3.26	16.30	875.00	0.229
BARE-ACAR -250-247	250	500 MCM	24×3.64 mm Al + 7×2.08 mm Alloy	3.64	2.08	18.20	1450.00	0.142
BARE-ACAR -400-307	400	800 MCM	30×4.11 mm Al + 7×2.84 mm Alloy	4.11	2.84	20.55	2320.00	0.089

ACSS 全铝合金钢芯架空裸导体
ACSS Aluminum Conductor Steel Supported

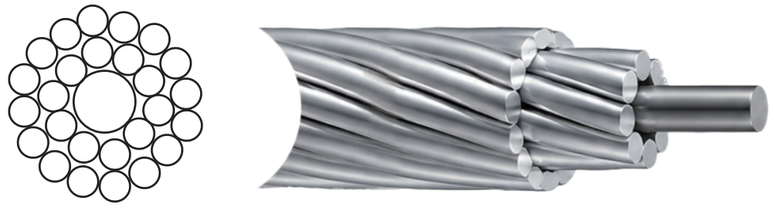

用途 Application

用于老旧线路增容改造与高温重载输电线路，无需更换杆塔即可提升传输容量，适配高负荷季节性输电通道

Used for capacity expansion transformation of old lines and high-temperature heavy-load transmission lines. It can increase transmission capacity without replacing towers, suitable for high-load seasonal transmission corridors.

结构 Construction

外层为退火软态铝线，中心为镀覆防腐钢芯加强；机械张力主要由钢芯承担，铝线主要承担导电功能

The outer layer is annealed soft aluminum wires, and the center is reinforced with anti-corrosion coated steel core. Mechanical tension is mainly borne by the steel core, and aluminum wires mainly undertake the conduction function.

产品特性 Product Feature

允许长期运行温度高，载流量远高于普通钢芯铝绞线；高温下弧垂增量小，线路运行安全性高；抗疲劳、抗蠕变性能优异，使用寿命长

High allowable long-term operating temperature, with much larger ampacity than ordinary ACSR. Small sag increment at high temperature with high line operation safety. Excellent fatigue resistance and creep resistance with long service life.

规格参数表 Specification Table

实心导体 Solid Conducto

产品型号 Model No.	标称截面 Nominal Section (mm^2)	对应规格 AWG / MCM	导体结构 Conductor Structure	软铝单线 d (mm)	钢芯 d (mm)	导体外径 Conductor OD (mm)	标称重量 Nominal Weight (kg/km)	20℃最大直流电阻 Max DC Resistance @20℃ (Ω/km)
BARE-ACSS -30-61	30	2 AWG	6×2.50 mm Soft Al + 1×2.50 mm Steel	2.50	2.50	7.50	249.00	1.02
BARE-ACSS -38-61	38	1 AWG	6×2.84 mm Soft Al + 1×2.84 mm Steel	2.84	2.84	8.52	322.00	0.799
BARE-ACSS -50-61	50	1/0 AWG	6×3.26 mm Soft Al + 1×3.26 mm Steel	3.26	3.26	9.78	423.00	0.652
BARE-ACSS -60-61	60	2/0 AWG	6×3.57 mm Soft Al + 1×3.57 mm Steel	3.57	3.57	10.71	507.00	0.543
BARE-ACSS -80-61	80	3/0 AWG	6×4.12 mm Soft Al + 1×4.12 mm Steel	4.12	4.12	12.36	676.00	0.408
BARE-ACSS -100-61	100	4/0 AWG	6×4.62 mm Soft Al + 1×4.62 mm Steel	4.62	4.62	13.86	850.00	0.324
BARE-ACSS -125-181	125	250 MCM	18×2.97 mm Soft Al + 1×2.97 mm Steel	2.97	2.97	14.85	908.00	0.260
BARE-ACSS -150-247	150	300 MCM	24×2.82 mm Soft Al + 7×1.61 mm Steel	2.82	1.61	14.10	1142.00	0.215
BARE-ACSS -200-267	200	400 MCM	26×3.13 mm Soft Al + 7×1.82 mm Steel	3.13	1.82	15.65	1510.00	0.163
BARE-ACSS -250-307	250	500 MCM	30×3.26 mm Soft Al + 7×2.30 mm Steel	3.26	2.30	16.30	1885.00	0.131
BARE-ACSS -325-427	325	650 MCM	42×3.13 mm Soft Al + 7×2.62 mm Steel	3.13	2.62	16.65	2455.00	0.101
BARE-ACSS -400-457	400	800 MCM	45×3.36 mm Soft Al + 7×3.02 mm Steel	3.36	3.02	16.80	3025.00	0.083
BARE-ACSS -500-547	500	1000 MCM	54×3.43 mm Soft Al + 7×3.43 mm Steel	3.43	3.43	17.15	3780.00	0.066

Solid Conductor
AAC All-Aluminum
Overhead Bare
Conductor

ACSR
Aluminum
Conductor
Steel Reinforced

AAAC
All-Aluminum
Alloy Conductor

ACAR
Aluminum
Conductor
Alloy Reinforced

ACSS
Aluminum
Conductor Steel
Supported

AW Aluminum
-Clad Steel Wire

Solid Conductor
TBC Hard Drawn
Copper Conductor

GW Galvanized
Steel Ground Wire

AW 铝包钢绞线架空裸导体
AW Aluminum-Clad Steel Wire

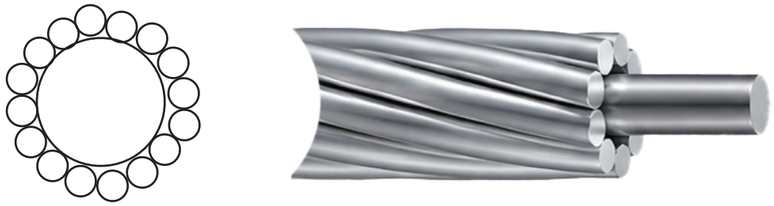

用途 Application

用作架空线路避雷线、光纤复合地线导体主体，也可用于重冰区、大档距线路的接地承载，适配高腐蚀、高张力户外场景

Used as overhead line lightning protection wire and main conductor of optical fiber composite ground wire, also applicable to grounding bearing of heavy ice area and large span lines, suitable for high corrosion and high tension outdoor scenarios.

结构 Construction

每根单线均为钢芯外包铝层的复合结构，再经正规绞合成型；钢芯提供机械强度，铝层提供导电与耐腐蚀性能

Each single wire has a composite structure of steel core coated with aluminum layer, then formed by standard stranding. Steel core provides mechanical strength, and aluminum layer provides conductivity and corrosion resistance.

产品特性 Product Feature

抗拉强度极高，耐腐蚀性能远优于镀锌钢绞线；导电性能优于纯钢绞线，兼具优异的机械性能与环境适应性

Extremely high tensile strength, with much better corrosion resistance than galvanized steel strands. Better conductivity than pure steel strands, combining excellent mechanical properties and environmental adaptability.

规格参数表 Specification Table

实心导体 Solid Conducto

产品型号 Model No.	标称截面 Nominal Section (mm^2)	导体结构 Conductor Structure	单丝直径 d (mm)	导体外径 Conductor OD (mm)	标称重量 Nominal Weight (kg/km)	20℃最大直流电阻 Max DC Resistance @20℃ (Ω/km)
BARE-AW -14-7	14	7×1.59 mm	1.59	4.77	109.00	5.88
BARE-AW -22-7	22	7×2.00 mm	2.00	6.00	171.00	3.75
BARE-AW -30-7	30	7×2.34 mm	2.34	7.02	233.00	2.75
BARE-AW -50-7	50	7×3.01 mm	3.01	9.03	379.00	1.69
BARE-AW -80-19	80	19×2.32 mm	2.32	11.60	605.00	1.06
BARE-AW -100-19	100	19×2.59 mm	2.59	12.95	756.00	0.847

铜绞线架空裸导体TBC 实心导体
Solid Conductor TBC Hard Drawn Copper Conductor



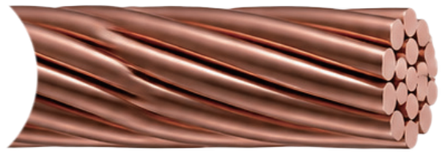

用途 Application

可用作架空传输配线、电气设备连接线、接地跳线与母线，也可作为避雷引下线、等电位连接导体，适配室内外各类电气连接场景

Used as overhead transmission distribution wires, electrical equipment connection wires, grounding jumpers and busbars, also as lightning down conductors and equipotential connection conductors, suitable for various indoor and outdoor electrical connection scenarios.

结构 Construction

采用高纯度无氧铜导体，分为实心与多股同心绞合两种结构，单线直径、绞合根数严格参照标准图纸；导体表面光洁，导电性能稳定

Adopts high-purity oxygen-free copper conductor, available in solid and multi-stranded concentric structures. Single wire diameter and stranding quantity strictly follow standard drawings. Smooth conductor surface with stable conductivity.

产品特性 Product Feature

导电性能优异，传输损耗极低；延展性好，便于弯折与端接；耐大气腐蚀、焊接性能好，是电气接地与小容量传输的通用导体

Excellent conductivity with extremely low transmission loss. Good ductility, easy to bend and terminate. Resistant to atmospheric corrosion and good welding performance, it is a general conductor for electrical grounding and small capacity transmission.

规格参数表 Specification Table

实心导体 Solid Conducto

产品型号 Model No.	标称截面 Nominal Section (mm²)	对应规格 AWG / MCM	导体结构 Conductor Structure	单线直径 d (mm)	导体外径 Conductor OD (mm)	标称重量 Nominal Weight (kg/km)	20℃最大直流电阻 Max DC Resistance @20℃ (Ω/km)
BARE-TBC-5.3-S	5.3	10 AWG	1×2.60 mm	2.60	2.60	58.90	3.25
BARE-TBC-8.0-S	8.0	8 AWG	1×3.20 mm	3.20	3.20	93.70	2.14
BARE-TBC-13.3-S	13.3	6 AWG	1×4.115 mm	4.115	4.115	148.90	1.30
BARE-TBC-21.2-S	21.2	4 AWG	1×5.189 mm	5.189	5.189	237.20	0.81

绞合导体Twisted conductor

产品型号 Model No.	标称截面 Nominal Section (mm²)	对应规格 AWG / MCM	导体结构 Conductor Structure	单线直径 d (mm)	导体外径 Conductor OD (mm)	标称重量 Nominal Weight (kg/km)	20℃最大直流电阻 Max DC Resistance @20℃ (Ω/km)
BARE-TBC-2.0-7	2.0	14 AWG	7×0.60 mm	0.60	1.80	23.10	7.15
BARE-TBC-3.5-7	3.5	12 AWG	7×0.80 mm	0.80	2.40	38.50	4.29
BARE-TBC-5.5-7	5.5	10 AWG	7×1.00 mm	1.00	3.00	60.00	2.75
BARE-TBC-8.0-7	8.0	8 AWG	7×1.20 mm	1.20	3.60	87.40	1.89
BARE-TBC-14-7	14	6 AWG	7×1.60 mm	1.60	4.80	153.00	1.16
BARE-TBC-22-7	22	4 AWG	7×2.00 mm	2.00	6.00	239.00	0.743
BARE-TBC-30-7	30	2 AWG	7×2.30 mm	2.30	6.90	310.00	0.574
BARE-TBC-38-19	38	1 AWG	19×1.60 mm	1.60	8.00	393.00	0.452
BARE-TBC-50-19	50	1/0 AWG	19×1.80 mm	1.80	9.00	515.00	0.345
BARE-TBC-60-19	60	2/0 AWG	19×2.00 mm	2.00	10.00	649.00	0.274
BARE-TBC-80-19	80	3/0 AWG	19×2.30 mm	2.30	11.50	865.00	0.205
BARE-TBC-100-19	100	4/0 AWG	19×2.60 mm	2.60	13.00	1104.00	0.161
BARE-TBC-125-37	125	250 MCM	37×2.10 mm	2.10	14.70	1380.00	0.128
BARE-TBC-150-37	150	300 MCM	37×2.30 mm	2.30	16.10	1656.00	0.107
BARE-TBC-200-37	200	400 MCM	37×2.60 mm	2.60	18.20	2208.00	0.080
BARE-TBC-250-61	250	500 MCM	61×2.30 mm	2.30	20.70	2760.00	0.064
BARE-TBC-325-61	325	650 MCM	61×2.60 mm	2.60	23.40	3588.00	0.049
BARE-TBC-400-61	400	800 MCM	61×2.90 mm	2.90	26.10	4416.00	0.040
BARE-TBC-500-61	500	1000 MCM	61×3.20 mm	3.20	28.80	5520.00	0.032

GW 镀锌钢绞线架空地线
GW Galvanized Steel Ground Wire



用途 Application

用作架空线路避雷线、电气设备接地干线、杆塔接地引下线及拉线，也可用于通讯线路吊线，适配户外高张力接地场景

Used as overhead line lightning protection wire, electrical equipment grounding trunk line, tower grounding down conductor and guy wire, also applicable to communication line messenger wire, suitable for outdoor high tension grounding scenarios.

结构 Construction

采用高强度碳素钢丝，经热镀锌防腐处理后正规绞合成型；锌层均匀致密，防腐性能优异

Adopts high-strength carbon steel wires, formed by standard concentric stranding after hot-dip galvanizing anti-corrosion treatment. Uniform and dense zinc layer with excellent anti-corrosion performance.

产品特性 Product Feature

抗拉强度高，机械性能优异；热镀锌防腐层均匀致密，耐大气腐蚀；适用于架空避雷线、接地干线及拉线等高强度接地场景

It features high tensile strength and excellent mechanical properties. Its hot-dip galvanized anti-corrosion coating is uniform and dense, offering good atmospheric corrosion resistance. It is suitable for high-strength earthing applications such as overhead lightning conductors, main earthing lines and stay wires.

规格参数表 Specification Table

产品型号 Model No.	标称截面 Nominal Section (mm^2)	对应规格 AWG / MCM	导体结构 Conductor Structure	单丝直径 d (mm)	导体外径 Conductor OD (mm)	标称重量 Nominal Weight (kg/km)	公称抗拉强度 Nominal Tensile Strength (MPa)
BARE-GW-2.0-7	2.0	14 AWG	7×0.60 mm	0.60	1.80	16.2	1270
BARE-GW-3.5-7	3.5	12 AWG	7×0.80 mm	0.80	2.40	28.3	1270
BARE-GW-5.5-7	5.5	10 AWG	7×1.00 mm	1.00	3.00	44.5	1270
BARE-GW-8.0-7	8.0	8 AWG	7×1.20 mm	1.20	3.60	64.7	1270
BARE-GW-14-7	14	6 AWG	7×1.60 mm	1.60	4.80	113.2	1270
BARE-GW-22-7	22	4 AWG	7×2.00 mm	2.00	6.00	177.9	1270
BARE-GW-30-7	30	2 AWG	7×2.30 mm	2.30	6.90	242.6	1270
BARE-GW-38-19	38	1 AWG	19×1.60 mm	1.60	8.00	307.2	1270
BARE-GW-50-19	50	1/0 AWG	19×1.80 mm	1.80	9.00	404.3	1270
BARE-GW-60-19	60	2/0 AWG	19×2.00 mm	2.00	10.00	485.1	1270
BARE-GW-80-19	80	3/0 AWG	19×2.30 mm	2.30	11.50	646.8	1270
BARE-GW-100-19	100	4/0 AWG	19×2.60 mm	2.60	13.00	808.6	1270

VOLINIX

新能源电缆系列

ENERGY CABLE SERIES

章节概述 CHAPTER OVERVIEW:

本系列产品包括光伏电缆、储能电缆、充电桩电缆、风力发电电缆等，广泛应用于太阳能发电、储能系统、电动汽车充电、风力发电等新能源领域。产品采用特种绝缘材料和护套材料，具有优良的耐候性、耐油性、耐臭氧性和阻燃性能。产品符合国际通用新能源电缆标准

This series includes PV cables, energy storage cables, EV charging cables and wind power cables, widely used in solar power, energy storage systems, EV charging and wind power. With special insulation and sheath materials, featuring excellent weather resistance, oil resistance, ozone resistance and flame retardancy. Compliant with international new energy cable standards.

1.5kV PV1-F Photovoltaic Cable
1.5kV H1Z2Z2-K Photovoltaic Cable
PV AC Copper 0.6/1kV PV System AC Copper Cable
PV AC Aluminum 0.6/1kV PV System AC Aluminum Alloy Cable
PV AC Armored Al 0.6/1kV PV System Armored Aluminum Alloy Cable

1.5kV PV1-F 光伏专用电缆
1.5kV PV1-F Photovoltaic Cable



用途 Application

适用于光伏电站系统中光伏组件之间、组件与汇流箱之间的连接，可在户外恶劣环境下长期使用，耐紫外线、耐臭氧、耐候性能优异

Suitable for connecting PV modules and between modules and combiner boxes in photovoltaic power systems. Can be used outdoors in harsh environments for long periods, with excellent UV resistance, ozone resistance, and weatherability.

结构 Construction

导体为第5类软铜导体，绝缘层为交联聚乙烯（XLPE），外护套为低烟无卤阻燃聚烯烃（LSZH），双层共挤工艺，整体结构紧凑柔软

Conductor is Class 5 flexible stranded copper. Insulation is cross-linked polyethylene (XLPE). Outer sheath is low smoke zero halogen flame retardant polyolefin (LSZH). Double-layer co-extrusion process, compact and flexible structure.

芯数规格 Core Config.

单芯，截面1.5~35mm²

Single core, cross-section 1.5~35mm²

产品特性 Product Feature

符合TÜV 2PfG 1169标准，DC 1.5kV额定电压；耐紫外线、耐臭氧、耐候性强；低烟无卤阻燃，环保安全；导体长期工作温度120℃，短路温度250℃；敷设温度不低于-40℃

Compliant with TÜV 2PfG 1169 standard, rated voltage DC 1.5kV. Excellent UV resistance, ozone resistance, and weatherability. Low smoke zero halogen flame retardant, eco-friendly and safe. Long-term conductor operating temperature 120℃, short-circuit temperature 250℃. Installation temperature not lower than -40℃.

规格参数表 Specification Table

产品代号 Model No.	截面mm²	AWG/kcmil	导体结构 Constr.	绝缘厚度 Insul. mm	护套厚度 Jacket mm	近似外径 Dia. mm	直流电阻 Ω/km	载流量 Amp. A	近似重量 Wt. kg/km
NE-PV1F-1C -1.5	1.5	16 AWG	30/0.25	0.5	0.8	5.1	12.1	20	32
NE-PV1F-1C -2.5	2.5	14 AWG	50/0.25	0.5	0.9	6.0	7.41	27	48
NE-PV1F-1C -4	4	12 AWG	56/0.30	0.5	0.9	7.0	4.61	37	70
NE-PV1F-1C -6	6	10 AWG	84/0.30	0.5	1.0	8.3	3.08	47	100
NE-PV1F-1C -10	10	8 AWG	80/0.40	0.6	1.0	9.7	1.84	65	148
NE-PV1F-1C -16	16	6 AWG	126/0.40	0.7	1.1	11.7	1.15	87	215
NE-PV1F-1C -25	25	4 AWG	196/0.40	0.7	1.2	13.9	0.74	115	310
NE-PV1F-1C -35	35	2 AWG	276/0.40	0.7	1.2	16.0	0.53	145	415

1.5kV H1Z2Z2-K 光伏专用电缆
1.5kV H1Z2Z2-K Photovoltaic Cable

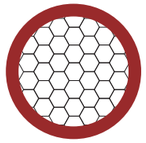



用途 Application

适用于光伏电站直流侧系统连接，包括光伏组件与汇流箱、汇流箱与逆变器之间的连接，可在户外恶劣环境下长期使用

Suitable for DC side system connection in photovoltaic power stations, including connections between PV modules and combiner boxes, and between combiner boxes and inverters. Can be used outdoors in harsh environments for long periods.

结构 Construction

导体为第5类软铜导体，绝缘层为交联聚乙烯（XLPE），内护套为低烟无卤阻燃聚烯烃（LSZH），外护套为低烟无卤阻燃聚烯烃（LSZH），双层共挤工艺

Class 5 flexible copper conductor, XLPE insulation, inner LSZH sheath, outer LSZH sheath, double-layer co-extrusion process.

芯数规格 Core Config.

单芯，截面4~120mm²

Single core, cross-section 4~120mm²

产品特性 Product Feature

符合EN 50618标准，DC 1.5kV额定电压；耐紫外线、耐臭氧、耐候性强；低烟无卤阻燃，环保安全；双层共挤绝缘，电气性能优异

Compliant with EN 50618 standards, rated for DC 1.5kV. It boasts strong resistance to ultraviolet rays, ozone and weathering. Low-smoke, halogen-free and flame-retardant, it is environmentally friendly and safe. With double-layer co-extruded insulation, it delivers outstanding electrical properties.

规格参数表 Specification Table

产品代号 Model No.	截面mm²	AWG/kcmil	导体结构 Constr.	绝缘厚度 Insul. mm	护套厚度 Jacket mm	近似外径 Dia. mm	直流电阻 Ω/km	载流量 Amp. A	近似重量 Wt. kg/km
NE-PVDC-1C-4	4	12 AWG	56/0.30	0.5	0.9	7.0	4.61	37	70
NE-PVDC-1C-6	6	10 AWG	84/0.30	0.5	1.0	8.3	3.08	47	100
NE-PVDC-1C-10	10	8 AWG	80/0.40	0.6	1.0	9.7	1.84	65	148
NE-PVDC-1C-16	16	6 AWG	126/0.40	0.6	1.1	11.7	1.15	87	215
NE-PVDC-1C-25	25	4 AWG	196/0.40	0.7	1.2	13.9	0.74	115	310
NE-PVDC-1C-35	35	2 AWG	276/0.40	0.7	1.2	16.0	0.53	145	415
NE-PVDC-1C-50	50	1/0 AWG	396/0.40	0.9	1.3	18.5	0.39	180	560
NE-PVDC-1C-70	70	2/0 AWG	532/0.40	0.9	1.4	21.0	0.27	230	750
NE-PVDC-1C-95	95	3/0 AWG	756/0.40	1.0	1.5	24.0	0.20	285	980
NE-PVDC-1C-120	120	4/0 AWG	960/0.40	1.0	1.6	26.5	0.16	335	1200

1.5kV PV1-F Photovoltaic Cable
1.5kV H1Z2Z2-K Photovoltaic Cable
PV AC Copper 0.6/1kV PV System AC Copper Cable
PV AC Aluminum 0.6/1kV PV System AC Aluminum Alloy Cable
PV AC Armored Al 0.6/1kV PV System Armored Aluminum Alloy Cable

PV AC Copper 0.6/1kV 光伏系统交流铜芯电缆
PV AC Copper 0.6/1kV PV System AC Copper Cable

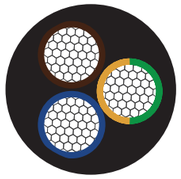

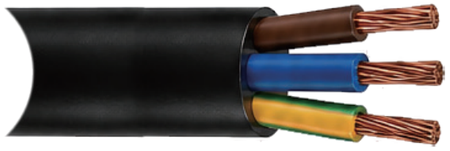

用途 Application

适用于光伏电站交流侧系统连接，包括逆变器与配电柜、配电柜与变压器之间的连接，以及交流并网线路

Suitable for AC side system connection in photovoltaic power stations, including connections between inverters and distribution cabinets, distribution cabinets and transformers, and AC grid connection lines.

结构 Construction

铜导体，交联聚乙烯（XLPE）绝缘，低烟无卤阻燃聚烯烃（LSZH）护套

Copper conductor, XLPE insulation, low smoke zero halogen flame retardant poly-olefin (LSZH) sheath.

芯数规格　Core Config.

1~5芯，单芯代表性规格2.5~300mm²

1~5 cores, single core representative specification 2.5~300mm²

产品特性 Product Feature

符合标准，0.6/1kV额定电压；低烟无卤阻燃，环保安全；优良的电气性能和机械性能；耐老化、耐腐蚀

Compliant with standard, 0.6/1kV rated voltage; low smoke zero halogen flame retardant, eco-friendly and safe; excellent electrical and mechanical properties; aging resistant, corrosion resistant.

规格参数表 Specification Table

产品代号 Model No.	截面mm²	AWG/kcmil	导体结构 Constr.	绝缘厚度 Insul. mm	护套厚度 Jacket mm	近似外径 Dia. mm	直流电阻 Ω/km	载流量 Amp. A	近似重量 Wt. kg/km
NE-PVAC-1C-2.5	2.5	14 AWG	1/1.78	0.7	1.0	6.1	7.41	27	45
NE-PVAC-1C-4	4	12 AWG	1/2.25	0.7	1.0	6.8	4.61	37	58
NE-PVAC-1C-6	6	10AWG	1/2.76	0.7	1.0	7.6	3.08	47	75
NE-PVAC-1C-10	10	8 AWG	7/1.35	0.7	1.1	9.0	1.84	65	110
NE-PVAC-1C-16	16	6 AWG	7/1.70	0.7	1.1	10.5	1.15	87	155
NE-PVAC-1C-25	25	4 AWG	7/2.14	0.9	1.2	12.8	0.74	115	220
NE-PVAC-1C-35	35	2 AWG	7/2.52	0.9	1.2	14.2	0.53	145	285
NE-PVAC-1C-50	50	1/0 AWG	19/1.78	1.0	1.3	16.6	0.39	180	385
NE-PVAC-1C-70	70	2/0 AWG	19/2.14	1.1	1.4	19.2	0.27	230	510
NE-PVAC-1C-95	95	3/0 AWG	19/2.52	1.1	1.5	21.8	0.20	285	665
NE-PVAC-1C-120	120	4/0 AWG	37/2.03	1.2	1.6	24.2	0.16	335	820
NE-PVAC-1C-150	150	300 kcmil	37/2.25	1.4	1.7	27.0	0.13	390	1010
NE-PVAC-1C-185	185	350 kcmil	37/2.52	1.4	1.8	29.5	0.10	450	1220
NE-PVAC-1C-240	240	500 kcmil	61/2.25	1.6	1.9	33.0	0.08	540	1550
NE-PVAC-1C-300	300	600 kcmil	61/2.52	1.7	2.0	36.0	0.06	625	1900

1.5kV PV1-F Photovoltaic Cable
1.5kV H1Z2Z2-K Photovoltaic Cable
PV AC Copper 0.6/1kV PV System AC Copper Cable
PV AC Aluminum 0.6/1kV PV System AC Aluminum Alloy Cable
PV AC Armored Al 0.6/1kV PV System Armored Aluminum Alloy Cable

PV AC Aluminum 0.6/1kV 光伏系统交流铝合金电缆
PV AC Aluminum 0.6/1kV PV System AC Aluminum Alloy Cable



用途 Application

适用于光伏电站交流侧系统连接，具有重量轻、成本低、抗腐蚀等优点，是铜芯电缆的理想替代产品

Suitable for AC side system connection in photovoltaic power stations. Features light weight, low cost, corrosion resistance, and is an ideal alternative to copper core cables.

结构 Construction

8000系列铝合金导体（AA8030/AA8176），交联聚乙烯（XLPE）绝缘，低烟无卤阻燃聚烯烃（LSZH）护套

8000 series aluminum alloy conductor (AA8030/AA8176), XLPE insulation, low smoke zero halogen flame retardant polyolefin (LSZH) sheath.

芯数规格 Core Config.

1~4芯，单芯代表性规格16~400mm²

1~4 cores, single core representative specification 16~400mm²

产品特性 Product Feature

符合 / ASTM B800标准，0.6/1kV额定电压；低烟无卤阻燃，环保安全；铝合金导体，重量轻、成本低；优良的抗蠕变性能和连接可靠性

Compliant with / ASTM B800 standards, 0.6/1kV rated voltage; low smoke zero halogen flame retardant, eco-friendly and safe; aluminum alloy conductor, light weight, low cost; excellent creep resistance and connection reliability.

规格参数表 Specification Table

产品代号 Model No.	截面mm²	AWG/kcmil	导体结构 Constr.	绝缘厚度 Insul. mm	护套厚度 Jacket mm	近似外径 Dia. mm	直流电阻 Ω/km	载流量 Amp. A	近似重量 Wt. kg/km
NE-PVAC-AL-1C-16	16	6 AWG	1/4.51	0.7	1.1	10.0	1.91	69	95
NE-PVAC-AL-1C-25	25	4 AWG	1/5.65	0.9	1.2	12.2	1.20	90	140
NE-PVAC-AL-1C-35	35	2 AWG	1/6.68	0.9	1.2	13.6	0.87	115	180
NE-PVAC-AL-1C-50	50	1/0 AWG	7/3.00	1.0	1.3	15.8	0.62	145	240
NE-PVAC-AL-1C-70	70	2/0 AWG	7/3.55	1.1	1.4	18.2	0.44	185	320
NE-PVAC-AL-1C-95	95	3/0 AWG	7/4.12	1.2	1.5	20.6	0.32	230	415
NE-PVAC-AL-1C-120	120	4/0 AWG	19/2.85	1.2	1.6	23.0	0.26	270	510
NE-PVAC-AL-1C-150	150	300 kcmil	19/3.15	1.4	1.7	25.8	0.21	315	630
NE-PVAC-AL-1C-185	185	350 kcmil	19/3.52	1.4	1.8	28.2	0.17	365	760
NE-PVAC-AL-1C-240	240	500 kcmil	37/2.85	1.6	1.9	31.5	0.13	440	970
NE-PVAC-AL-1C-300	300	600 kcmil	37/3.15	1.7	2.0	34.5	0.11	510	1190
NE-PVAC-AL-1C-400	400	800 kcmil	61/2.85	2.0	2.2	39.0	0.08	610	1580

1.5kV PV1-F Photovoltaic Cable
1.5kV H1Z2Z2-K Photovoltaic Cable
PV AC Copper 0.6/1kV PV System AC Copper Cable
PV AC Aluminum 0.6/1kV PV System AC Aluminum Alloy Cable
PV AC Armored Al 0.6/1kV PV System Armored Aluminum Alloy Cable

PV AC Aluminum 0.6/1kV 光伏系统交流铝合金电缆
PV AC Aluminum Alloy 0.6/1kV Photovoltaic System ACAluminum Alloy Cable





用途 Application

适用于光伏电站交流侧直埋敷设、地下敷设等需要机械保护的场合，具有优良的机械防护性能

Suitable for direct burial, underground installation and other occasions requiring mechanical protection in PV power station AC side. Has excellent mechanical protection performance.

结构 Construction

8000系列铝合金导体（AA8030/AA8176），交联聚乙烯（XLPE）绝缘，钢带铠装（SWA），低烟无卤阻燃聚烯烃（LSZH）护套

8000 series aluminum alloy conductor (AA8030/AA8176), XLPE insulation, steel wire armor (SWA), low smoke zero halogen flame retardant polyolefin (LSZH) sheath.

芯数规格 Core Config.

3~4芯，三芯代表性规格25~400mm²

3~4 cores, 3-core representative specification 25~400mm²

产品特性 Product Feature

符合标准，0.6/1kV额定电压；钢带铠装，机械强度高；低烟无卤阻燃，环保安全；铝合金导体，重量轻、成本低

Compliant with standard, 0.6/1kV rated voltage; steel wire armor, high mechanical strength; low smoke zero halogen flame retardant, eco-friendly and safe; aluminum alloy conductor, light weight, low cost.

规格参数表 Specification Table

产品代号 Model No.	截面mm²	AWG/kcmil	导体结构 Constr.	绝缘厚度 Insul. mm	护套厚度 Jacket mm	近似外径 Dia. mm	直流电阻 Ω/km	载流量 Amp. A	近似重量 Wt. kg/km
NE-PVAC-ALS-3C-25	25	4 AWG	7/2.14	0.9	1.2	23.5	0.74	95	980
NE-PVAC-ALS-3C-35	35	2 AWG	7/2.52	0.9	1.2	25.5	0.53	120	1200
NE-PVAC-ALS-3C-50	50	1/0 AWG	19/1.78	1.0	1.3	28.5	0.39	150	1550
NE-PVAC-ALS-3C-70	70	2/0 AWG	19/2.14	1.1	1.4	32.0	0.27	190	1980
NE-PVAC-ALS-3C-95	95	3/0 AWG	19/2.52	1.2	1.5	35.5	0.20	235	2480
NE-PVAC-ALS-3C-120	120	4/0 AWG	37/2.03	1.2	1.6	39.0	0.16	280	3020
NE-PVAC-ALS-3C-150	150	300 kcmil	37/2.25	1.4	1.7	43.0	0.13	325	3700
NE-PVAC-ALS-3C-185	185	350 kcmil	37/2.52	1.4	1.8	46.5	0.10	375	4400
NE-PVAC-ALS-3C-240	240	500 kcmil	61/2.25	1.6	1.9	52.0	0.08	450	5500
NE-PVAC-ALS-3C-300	300	600 kcmil	61/2.52	1.7	2.0	56.5	0.06	520	6600
NE-PVAC-ALS-3C-400	400	800 kcmil	61/2.85	2.0	2.2	63.0	0.05	625	8200

ESS Cable 1.5kV 储能系统连接电缆 ESS Cable 1.5kV Energy Storage System Interconnecting Cable
Battery Cable 1.5kV Battery Pack Connecting Cable
PCS Cable 0.6/1kV PCS Connecting Cable

ESS Cable 1.5kV 储能系统连接电缆
ESS Cable 1.5kV Energy Storage System Interconnecting Cable





用途 Application

适用于储能电站系统连接，包括电池簇与汇流柜、汇流柜与PCS之间的连接，可在室内外环境下长期使用

Suitable for energy storage power station system connections, including connections between battery clusters and combiner cabinets, and between combiner cabinets and PCS. Can be used indoors and outdoors for long periods.

结构 Construction

第5类软铜导体，交联聚乙烯（XLPE）绝缘，低烟无卤阻燃聚烯烃（LSZH）护套

Class 5 flexible copper conductor, XLPE insulation, low smoke zero halogen flame retardant polyolefin (LSZH) sheath.

芯数规格　Core Config.

1~2芯，单芯代表性规格16~300mm²

1~2 cores, single core representative specification 16~300mm²

产品特性 Product Feature

符合标准，1.5kV额定电压；低烟无卤阻燃，环保安全；优良的电气性能和机械性能；耐候性强，使用寿命长

Compliant with standard, 1.5kV rated voltage; low smoke zero halogen flame retardant, eco-friendly and safe; excellent electrical and mechanical properties; strong weather resistance, long service life.

规格参数表 Specification Table

产品代号 Model No.	截面mm²	AWG/kcmil	导体结构 Constr.	绝缘厚度 Insul. mm	护套厚度 Jacket mm	近似外径 Dia. mm	直流电阻 Ω/km	载流量 Amp. A	近似重量 Wt. kg/km
NE-ESS-1C-16	16	6 AWG	126/0.40	0.7	1.1	10.5	1.15	87	155
NE-ESS-1C-25	25	4 AWG	196/0.40	0.9	1.2	12.8	0.74	115	220
NE-ESS-1C-35	35	2 AWG	276/0.40	0.9	1.2	14.2	0.53	145	285
NE-ESS-1C-50	50	1/0 AWG	396/0.40	1.0	1.3	16.6	0.39	180	385
NE-ESS-1C-70	70	2/0 AWG	532/0.40	1.1	1.4	19.2	0.27	230	510
NE-ESS-1C-95	95	3/0 AWG	756/0.40	1.2	1.5	21.8	0.20	285	665
NE-ESS-1C-120	120	4/0 AWG	960/0.40	1.2	1.6	24.2	0.16	335	820
NE-ESS-1C-150	150	300 kcmil	37/2.25	1.4	1.7	27.0	0.13	390	1010
NE-ESS-1C-185	185	350 kcmil	37/2.52	1.4	1.8	29.5	0.10	450	1220
NE-ESS-1C-240	240	500 kcmil	61/2.25	1.6	1.9	33.0	0.08	540	1550
NE-ESS-1C-300	300	600 kcmil	61/2.52	1.7	2.0	36.0	0.06	625	1900

ESS Cable 1.5kV 储能系统连接电缆 ESS Cable 1.5kV Energy Storage System Interconnecting Cable
Battery Cable 1.5kV Battery Pack Connecting Cable
PCS Cable 0.6/1kV PCS Connecting Cable

Battery Cable 1.5kV 电池组连接电缆
Battery Cable 1.5kV Battery Pack Connecting Cable



用途 Application

适用于储能电站电池组内部连接，包括电池模块之间、电池簇内部的连接，具有高灵活性和可靠性

Suitable for internal connections of battery packs in energy storage power stations, including connections between battery modules and within battery clusters. High flexibility and reliability.

结构 Construction

第6类极软铜导体，交联聚乙烯（XLPE）绝缘，低烟无卤阻燃聚烯烃（LSZH）护套

Class 6 extra flexible copper conductor, XLPE insulation, low smoke zero halogen flame retardant polyolefin (LSZH) sheath.

芯数规格 Core Config.

单芯，截面6~120mm²

Single core, cross-section 6~120mm²

产品特性 Product Feature

符合标准，极软导体，便于安装；低烟无卤阻燃，环保安全；优良的电气性能；耐老化、耐腐蚀

Compliant with standard, extra flexible conductor for easy installation; low smoke zero halogen flame retardant, eco-friendly and safe; excellent electrical performance; aging resistant, corrosion resistant.

规格参数表 Specification Table

产品代号 Model No.	截面mm²	AWG/kcmil	导体结构 Constr.	绝缘厚度 Insul. mm	护套厚度 Jacket mm	近似外径 Dia. mm	直流电阻 Ω/km	载流量 Amp. A	近似重量 Wt. kg/km
NE-BAT-1C-6	6	10 AWG	84/0.30	0.7	1.0	7.6	3.08	47	75
NE-BAT-1C-10	10	8 AWG	80/0.40	0.7	1.1	9.0	1.84	65	110
NE-BAT-1C-16	16	6 AWG	126/0.40	0.7	1.1	10.5	1.15	87	155
NE-BAT-1C-25	25	4 AWG	196/0.40	0.9	1.2	12.8	0.74	115	220
NE-BAT-1C-35	35	2 AWG	276/0.40	0.9	1.2	14.2	0.53	145	285
NE-BAT-1C-50	50	1/0 AWG	396/0.40	1.0	1.3	16.6	0.39	180	385
NE-BAT-1C-70	70	2/0 AWG	532/0.40	1.1	1.4	19.2	0.27	230	510
NE-BAT-1C-95	95	3/0 AWG	756/0.40	1.1	1.5	21.8	0.20	285	665
NE-BAT-1C-120	120	4/0 AWG	960/0.40	1.2	1.6	24.2	0.16	335	820

ESS Cable 1.5kV 储能系统连接电缆 ESS Cable 1.5kV Energy Storage System Interconnecting Cable
Battery Cable 1.5kV Battery Pack Connecting Cable
PCS Cable 0.6/1kV PCS Connecting Cable

PCS Cable 0.6/1kV 储能变流器连接电缆
PCS Cable 0.6/1kV PCS Connecting Cable

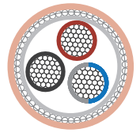



用途 Application

适用于储能电站储能变流器（PCS）连接，包括PCS与变压器、PCS与汇流柜之间的连接，具有高可靠性

Suitable for PCS (Power Conversion System) connections in energy storage power stations, including connections between PCS and transformers, and between PCS and combiner cabinets. High reliability.

结构 Construction

第5类软铜导体，交联聚乙烯（XLPE）绝缘，低烟无卤阻燃聚烯烃（LSZH）护套

Class 5 flexible copper conductor, XLPE insulation, low smoke zero halogen flame retardant polyolefin (LSZH) sheath.

芯数规格 Core Config.

1~4芯，三芯代表性规格25~300mm²

1~4 cores, 3-core representative specification 25~300mm²

产品特性 Product Feature

符合标准，0.6/1kV额定电压；低烟无卤阻燃，环保安全；优良的电气性能和机械性能；耐候性强

Compliant with standard, 0.6/1kV rated voltage; low smoke zero halogen flame retardant, eco-friendly and safe; excellent electrical and mechanical properties; strong weather resistance.

规格参数表 Specification Table

产品代号 Model No.	截面mm²	AWG/kcmil	导体结构 Constr.	绝缘厚度 Insul. mm	护套厚度 Jacket mm	近似外径 Dia. mm	直流电阻 Ω/km	载流量 Amp. A	近似重量 Wt. kg/km
NE-PCS-3C-25	25	4 AWG	7/2.14	0.9	1.2	23.5	0.74	95	980
NE-PCS-3C-35	35	2 AWG	7/2.52	0.9	1.2	25.5	0.53	120	1200
NE-PCS-3C-50	50	1/0 AWG	19/1.78	1.0	1.3	28.5	0.39	150	1550
NE-PCS-3C-70	70	2/0 AWG	19/2.14	1.1	1.4	32.0	0.27	190	1980
NE-PCS-3C-95	95	3/0 AWG	19/2.52	1.2	1.5	35.5	0.20	235	2480
NE-PCS-3C-120	120	4/0 AWG	37/2.03	1.2	1.6	39.0	0.16	280	3020
NE-PCS-3C-150	150	300 kcmil	37/2.25	1.4	1.7	43.0	0.13	325	3700
NE-PCS-3C-185	185	350 kcmil	37/2.52	1.4	1.8	46.5	0.10	375	4400
NE-PCS-3C-240	240	500 kcmil	61/2.25	1.6	1.9	52.0	0.08	450	5500
NE-PCS-3C-300	300	600 kcmil	61/2.52	1.7	2.0	56.5	0.06	520	6600

AC Charging 450/750V 交流充电桩电缆
AC Charging 450/750V AC EV Charging Cable

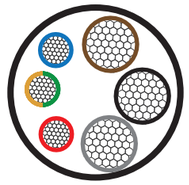

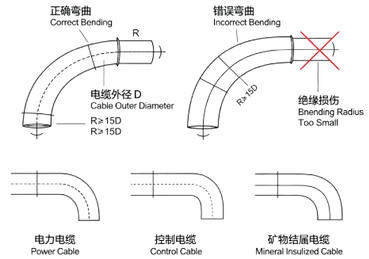

用途 Application

适用于电动汽车交流充电桩与车辆之间的连接，可在户外环境下长期使用，耐候性强

Suitable for connection between AC charging piles and electric vehicles. Can be used outdoors for long periods with excellent weather resistance.

结构 Construction

第5类软铜导体，XLPE绝缘，TPE/TPU护套，包含动力线芯、接地线芯和控制信号线芯

Class 5 flexible copper conductor, XLPE insulation, TPE/TPU sheath, including power cores, PE core and control signal cores.

芯数规格 Core Config.

3芯动力+1芯接地+1芯控制（3+2芯结构），动力线截面2.5~35mm²

3 power + 1 PE + 2 control (3+2 core structure), power core cross-section 2.5~35mm²

产品特性 Product Feature

符合标准，AC 1kV额定电压；高柔性，便于弯曲；耐候、耐油、耐磨；低烟无卤阻燃；优良的抗老化性能

Compliant with standard, AC 1kV rated voltage; high flexibility for easy bending; weather resistant, oil resistant, wear resistant; low smoke zero halogen flame retardant; excellent aging resistance.

规格参数表 Specification Table

代号 Model No.	动力线芯 Power Core	接地线芯 PE Core	控制线芯 Signal Core	护套厚度 Jacket mm	近似外径 Dia. mm	载流量 Amp. A	近似重量 Wt. kg/km
NE-EVAC-3 C2-2.5	2.5mm² ×3 30/0.30	2.5mm²×1	0.75mm² ×224/0.20	1.2	12.5	25	180
NE-EVAC-3 C2-4	4mm² ×3 56/0.30	4mm²×1	0.75mm² ×224/0.20	1.2	14.0	32	240
NE-EVAC-3 C2-6	6mm² ×3 84/0.30	6mm²×1	0.75mm² ×224/0.20	1.3	15.5	40	310
NE-EVAC-3 C2-10	10mm² ×3 80/0.40	10mm²×1	1.0mm² ×32/0.20	1.4	18.0	55	450
NE-EVAC-3 C2-16	16mm² ×2 126/0.40	16mm²×1	1.5mm² ×30/0.25	1.5	21.0	72	620
NE-EVAC-3 C2-25	25mm² ×3 196/0.40	25mm²×1	2.5mm² ×250/0.25	1.6	24.5	95	850
NE-EVAC-3 C2-35	35mm² ×3 276/0.40	35mm²×1	2.5mm² ×250/0.25	1.7	27.5	120	1100

DC Charging 1.5kV 直流充电桩电缆
DC Charging 1.5kV DC EV Charging Cable





用途 Application

适用于电动汽车直流快充桩与车辆之间的连接，用于大功率快速充电场景

Suitable for connection between DC fast charging piles and electric vehicles. Used for high power fast charging scenarios.

结构 Construction

第5类软铜导体，XLPE绝缘，TPE/TPU护套，包含动力线芯、接地线芯、控制信号线芯和辅助电源线芯

Class 5 flexible copper conductor, XLPE insulation, TPE/TPU sheath, including power cores, PE core, control signal cores and auxiliary power cores.

芯数规格 Core Config.

2芯动力+1芯接地+2芯控制+2芯辅助（2+1+2+2芯结构），动力线截面16~95mm²

2 power + 1 PE + 2 control + 2 auxiliary (2+2+2 core structure), power core cross-section 16~95mm²

产品特性 Product Feature

符合标准，DC 1.5kV额定电压；高柔性，便于弯曲；耐候、耐油、耐磨；低烟无卤阻燃；可承受大电流，温升低

Compliant with standard, DC 1.5kV rated voltage; high flexibility for easy bending; weather resistant, oil resistant, wear resistant; low smoke zero halogen flame retardant; can withstand high current with low temperature rise.

规格参数表 Specification Table

代号 Model No.	动力线芯 Power Core	接地线芯 PE Core	控制线芯 Signal Core	辅助线芯 Aux. Core	护套厚度 Jacket mm	近似外径 Dia. mm	载流量 Amp. A	近似重量 Wt. kg/km
NE-EVDC-2 C2C2-16	16mm² ×2 126/0.40	16mm²×1	1.5mm² ×230/0.25	6mm² ×284/0.30	1.2	12.5	25	180
NE-EVDC-2 C2C2-25	25mm² ×2 196/0.40	25mm²×1	2.5mm² ×250/0.25	10mm² ×280/0.40	1.2	14.0	32	240
NE-EVDC-2 C2C2-35	35mm² ×2 276/0.40	35mm²×1	2.5mm² ×250/0.25	16mm² ×2126/0.40	1.3	15.5	40	310
NE-EVDC-2 C2C2-50	50mm² ×2 396/0.40	50mm²×1	4mm² ×256/0.30	25mm² ×2196/0.40	1.4	18.0	55	450
NE-EVDC-2 C2C2-70	70mm² ×2 532/0.40	70mm²×1	4mm² ×256/0.30	35mm² ×2276/0.40	1.9	21.0	72	620
NE-EVDC-2 C2C2-95	95mm² ×2 756/0.40	95mm²×1	6mm² ×284/0.30	50mm² ×2396/0.40	2.0	24.5	95	850

Portable Charger 450/750V 便携式充电枪电缆
Portable Charger 450/750V Portable EV Charging Gun Cable

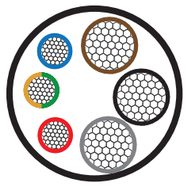

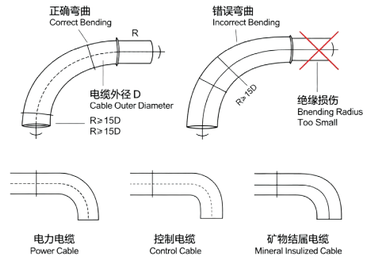

用途 Application

适用于便携式电动汽车充电枪，可随身携带，用于家庭或外出应急充电

Suitable for portable EV charging guns. Can be carried around for home or emergency charging on the go.

结构 Construction

第6类极软铜导体，TPE绝缘，TPE护套，包含动力线芯、接地线芯和控制信号线芯

Class 6 extra flexible copper conductor, TPE insulation, TPE sheath, including power cores, PE core and control signal cores.

芯数规格 Core Config.

3芯动力+1芯接地+2芯控制（3+2芯结构），动力线截面1.5~6mm²

3power + 1 PE + 2 control (3+2 core structure), power core cross-section 1.5~6mm²

产品特性 Product Feature

符合标准，AC 1kV额定电压；极软，便于收纳；轻便易携带；耐候、耐油、耐磨；低烟无卤阻燃

Compliant with standard, AC 1kV rated voltage; extra flexible for easy storage; light-weight and portable; weather resistant, oil resistant, wear resistant; low smoke zero halogen flame retardant.

规格参数表 Specification Table

代号 Model No.	动力线芯 Power Core	接地线芯 PE Core	控制线芯 Signal Core	护套厚度 Jacket mm	近似外径 Dia. mm	载流量 Amp. A	近似重量 Wt. kg/km
NE-EVPORT -3C2-1.5	1.5mm² ×3 30/0.30	1.5mm²×1	0.5mm² ×216/0.20	1.0	10.0	20	120
NE-EVPORT -3C2-2.5	2.5mm² ×3 56/0.30	2.5mm²×1	0.75mm² ×224/0.20	1.1	11.5	25	165
NE-EVPORT -3C2-4	4mm² ×3 56/0.30	4mm²×1	0.75mm² ×224/0.20	1.2	13.0	32	220
NE-EVPORT -3C2-6	6mm² ×3 84/0.30	6mm²×1	0.75mm² ×224/0.20	1.3	14.5	40	285

Wind Turbine 0.6/1kV 风力发电耐扭电缆
0.6/1kV Wind Power Torsion Resistant Cables



用途 Application

适用于风力发电机组机舱与轮毂之间的电力传输，能够承受频繁的扭转运动，是风力发电机组的关键配套电缆

Suitable for power transmission between wind turbine nacelle and hub, able to withstand frequent torsional movement, key supporting cable for wind turbines.

结构 Construction

第5类软铜导体，特种耐扭交联聚乙烯（XLPE）绝缘，低烟无卤阻燃聚烯烃（LSZH）护套，特殊抗扭结构设计

Class 5 flexible copper conductor, special torsion-resistant XLPE insulation, LSZH sheath, special anti-torsion structure design.

芯数规格 Core Config.

1~4芯，代表性规格16~185mm²

1~4 cores, representative specification 16~185mm²

产品特性 Product Feature

符合标准，0.6/1kV额定电压；优异的耐扭转性能，可承受数万次扭转；低烟无卤阻燃，环保安全；耐低温、耐候、耐油；柔软性好，便于安装

Compliant with standard, 0.6/1kV rated voltage; excellent torsion resistance, can withstand tens of thousands of torsions; LSZH flame retardant; low temperature, weather and oil resistant; good flexibility for easy installation.

规格参数表 Specification Table

产品代号 Model No.	截面mm²	AWG/kcmil	导体结构 Constr.	绝缘厚度 Insul. mm	护套厚度 Jacket mm	近似外径 Dia. mm	直流电阻 Ω/km	载流量 Amp. A	近似重量 Wt. kg/km
NE-TURBINE -1C-16	16	6 AWG	7/1.70	0.8	1.2	11.0	1.15	90	165
NE-TURBINE -1C-25	25	4 AWG	7/2.14	0.9	1.2	12.8	0.74	115	225
NE-TURBINE -1C-35	35	2 AWG	7/2.52	0.9	1.3	14.5	0.53	145	295
NE-TURBINE -1C-50	50	1/0 AWG	10/2.52	1.0	1.4	16.8	0.39	180	390
NE-TURBINE -1C-70	70	2/0 AWG	14/2.52	1.1	1.5	19.5	0.28	230	530
NE-TURBINE -1C-95	95	3/0 AWG	19/2.52	1.1	1.6	22.0	0.21	280	690
NE-TURBINE -1C-120	120	4/0 AWG	24/2.52	1.2	1.7	24.5	0.17	325	855
NE-TURBINE -1C-150	150	250 kcmil	30/2.52	1.3	1.8	27.0	0.14	375	1045
NE-TURBINE -1C-185	185	300 kcmil	37/2.52	1.4	1.9	29.5	0.11	430	1260

Tower Power 0.6/1kV 塔筒电力电缆
0.6/1kV Tower Power Cable





用途 Application

适用于风力发电机组塔筒内部的电力传输，从机舱到塔基的电力输送，固定敷设

Suitable for power transmission inside wind turbine tower, from nacelle to tower base, fixed installation.

结构 Construction

铜导体，交联聚乙烯（XLPE）绝缘，低烟无卤阻燃聚烯烃（LSZH）护套

Copper conductor, XLPE insulation, low smoke zero halogen flame retardant polyolefin (LSZH) sheath.

芯数规格 Core Config.

1~4芯，单芯代表性规格25~300mm²

1~4 cores, single core representative specification 25~300mm²

产品特性 Product Feature

符合标准，0.6/1kV额定电压；低烟无卤阻燃，环保安全；优良的电气性能和机械性能；耐老化、耐腐蚀

Compliant with standard, 0.6/1kV rated voltage; low smoke zero halogen flame retardant, eco-friendly and safe; excellent electrical and mechanical properties; aging resistant, corrosion resistant.

规格参数表 Specification Table

产品代号 Model No.	截面mm²	AWG/kcmil	导体结构 Constr.	绝缘厚度 Insul. mm	护套厚度 Jacket mm	近似外径 Dia. mm	直流电阻 Ω/km	载流量 Amp. A	近似重量 Wt. kg/km
NE-TOWER -1C-25	25	4 AWG	7/2.14	0.9	1.2	12.8	0.74	115	220
NE-TOWER -1C-35	35	2 AWG	7/2.52	0.9	1.2	14.2	0.53	145	285
NE-TOWER -1C-50	50	1/0 AWG	19/1.78	1.0	1.3	16.6	0.39	180	385
NE-TOWER -1C-70	70	2/0 AWG	19/2.14	1.1	1.4	19.2	0.27	230	510
NE-TOWER -1C-95	95	3/0 AWG	19/2.52	1.1	1.5	21.8	0.20	285	665
NE-TOWER -1C-120	120	4/0 AWG	37/2.03	1.2	1.6	24.2	0.16	335	820
NE-TOWER -1C-150	150	300 kcmil	37/2.25	1.4	1.7	27.0	0.13	390	1010
NE-TOWER -1C-185	185	350 kcmil	37/2.52	1.4	1.8	29.5	0.10	450	1220
NE-TOWER -1C-240	240	500 kcmil	61/2.25	1.6	1.9	33.0	0.08	540	1550
NE-TOWER -1C-300	300	600 kcmil	61/2.52	1.7	2.0	36.0	0.06	625	1900

Nacelle Control 300/500V 机舱控制电缆
300/500V Nacelle Control Cable





用途 Application

适用于风力发电机组机舱内部的控制和信号传输，连接各种传感器、执行器和控制系统

Suitable for control and signal transmission inside wind turbine nacelle. Connects various sensors, actuators and control systems.

结构 Construction

第5类软铜导体，聚氯乙烯（PVC）/XLPE绝缘，聚氯乙烯（PVC）/LSZH护套，屏蔽型可选

Class 5 flexible copper conductor, PVC / XLPE insulation, PVC / LSZH sheath, shielded type optional.

芯数规格 Core Config.

2~30芯，代表性规格0.75~2.5mm²

2~30 cores, representative specification 0.75~2.5mm²

产品特性 Product Feature

符合标准，300/500V额定电压；高柔性，便于安装；耐候、耐油、耐磨；抗干扰性能好（屏蔽型）

Compliant with standard, 300/500V rated voltage; high flexibility for easy installation; weather resistant, oil resistant, wear resistant; good anti-interference performance (shielded type).

规格参数表 Specification Table

产品代号 Model No.	截面mm²	AWG/kcmil	导体结构 Constr.	绝缘厚度 Insul. mm	护套厚度 Jacket mm	近似外径 Dia. mm	直流电阻 Ω/km	载流量 Amp. A	近似重量 Wt. kg/km
NE-NACELLE-8C-0.75	0.75	–	24/0.20	0.4	0.8	8.5	26.0	16	95
NE-NACELLE-12C-0.75	0.75	–	24/0.20	0.4	0.8	10.0	26.0	14	135
NE-NACELLE-16C-0.75	0.75	–	24/0.20	0.4	0.9	11.5	26.0	12	175
NE-NACELLE-8C-1.5	1.5	16 AWG	30/0.25	0.5	0.9	10.0	12.1	20	145
NE-NACELLE-12C-1.5	1.5	16 AWG	30/0.25	0.5	1.0	12.0	12.1	18	205
NE-NACELLE-16C-1.5	1.5	16 AWG	30/0.25	0.5	1.0	13.5	12.1	16	265
NE-NACELLE-8C-2.5	2.5	14 AWG	50/0.25	0.6	1.0	12.0	7.41	25	210
NE-NACELLE-12C-2.5	2.5	14 AWG	50/0.25	0.6	1.1	14.5	7.41	23	295
NE-NACELLE-16C-2.5	2.5	14 AWG	50/0.25	0.6	1.1	16.0	7.41	21	380

VOLINIX

热镀锌电缆桥架系列

HOT-DIP GALVANIZED CABLE TRAY SERIES

章节概述 CHAPTER OVERVIEW:

热镀锌电缆桥架采用优质冷轧钢板制造，表面经热镀锌处理，具有优异的防腐性能。锌层与钢材形成冶金结合，结合牢固，不易脱落。适用于室外、潮湿、工业腐蚀等环境，使用寿命可达20年以上

Hot dip galvanized cable tray is made of high-quality cold-rolled steel plate with hot dip galvanized surface treatment, with excellent corrosion resistance. The zinc layer forms metallurgical bonding with steel, with firm bonding and not easy to fall off. Suitable for outdoor, humid, industrial corrosion environments, with service life up to more than 20 years.

电缆桥架系统全场景示意图

CABLE TRAY SYSTEM APPLICATION SCENARIOS



工厂厂房/Factory Plant　　写字楼/Office Building　　数据中心/Data Center

镀锌槽式电缆桥架示意图
Galvanized Trough Type Cable Tray Diagram

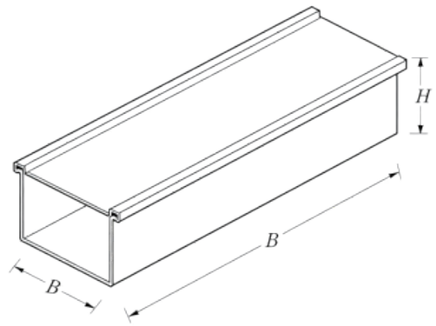

用途 Application

槽式电缆桥架是一种全封闭型电缆桥架，适用于敷设计算机电缆、通信电缆、热电偶电缆及其他高灵敏系统的控制电缆等。特别适用于强腐蚀环境和防尘要求高的场所，如化工企业、制药厂、食品加工厂等

Trough type cable tray is a fully enclosed cable tray, suitable for laying computer cables, communication cables, thermocouple cables, and control cables of other high-sensitivity systems. Especially suitable for strong corrosion environments and places with high dust-proof requirements, such as chemical plants, pharmaceutical factories, food processing plants, etc.

结构 Construction

采用优质冷轧钢板一次冲压成型，整体为槽型结构，配有盖板。侧板与底板为一体成型结构，连接处采用专用连接片和螺栓固定。可根据需要加装分隔板，实现强弱电分离敷设

Made of high-quality cold-rolled steel plate by one-time stamping, with overall trough structure and equipped with cover. Side plates and bottom plate are integrally formed, connected by special connection plates and bolts. Dividers can be installed as needed to realize separate laying of strong and weak current cables.

产品特性 Product Feature

- 全封闭结构，防尘、防干扰性能好
  Fully enclosed structure, excellent dust-proof and anti-interference performance
- 配有盖板，防护等级高
  Equipped with cover, high protection level
- 适用于控制电缆、信号电缆敷设
  Suitable for control cable and signal cable laying
- 可配分隔板，实现强弱电分离
  Can be equipped with dividers for strong and weak current separation
- 热镀锌表面处理，防腐性能优异
  Hot dip galvanized surface treatment, excellent corrosion resistance

规格参数表 Specification Table

产品代号 Model No.	规格 W×H (mm) Spec W×H	板厚 (mm) Thickness	盖板厚度 (mm) Cover Thickness	镀锌层厚度 (μm) Zinc Coating	重量 (kg/m)Weight	荷载等级 Load Grade
XQJ-C-01	100×50	1.0	0.8	≥65	3.2	A级
XQJ-C-02	100×100	1.0	0.8	≥65	4.5	A级
XQJ-C-03	150×75	1.0	0.8	≥65	4.8	A级
XQJ-C-04	150×100	1.2	1.0	≥65	6.2	B级
XQJ-C-05	200×100	1.2	1.0	≥65	7.5	B级
XQJ-C-06	200×150	1.5	1.2	≥65	10.8	B级
XQJ-C-07	300×100	1.5	1.2	≥65	11.2	C级
XQJ-C-08	300×150	1.5	1.2	≥65	13.5	C级
XQJ-C-09	400×100	2.0	1.5	≥65	15.8	C级
XQJ-C-10	400×150	2.0	1.5	≥65	18.5	D级

镀锌托盘式电缆桥架示意图
Galvanized Tray Type Cable Tray Diagram

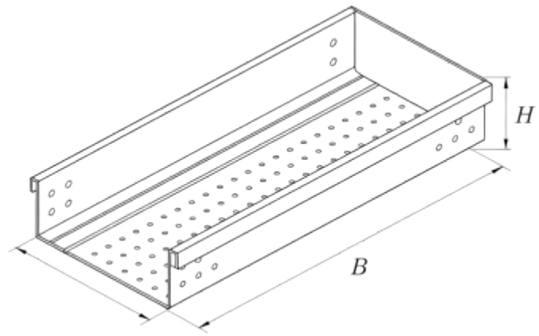

用途 Application

托盘式电缆桥架是石油、化工、轻工、电讯等方面应用最广泛的一种。既适用于动力电缆的安装，也适用于控制电缆的敷设。广泛应用于发电厂、变电站、石化企业、数据中心等场所

Tray type cable tray is the most widely used in petroleum, chemical, light industry, telecommunications and other fields. Suitable for both power cable installation and control cable laying. Widely used in power plants, substations, petrochemical enterprises, data centers and other places.

结构 Construction

采用优质冷轧钢板冲压成型，底板带有冲孔，两侧有侧板。整体呈托盘状结构，具有良好的散热性能。可根据需要选配盖板，提高防护等级。连接处采用专用连接片和螺栓固定

Made of high-quality cold-rolled steel plate by stamping, with perforated bottom plate and side plates on both sides. Overall tray-shaped structure with good heat dissipation performance. Cover can be selected as needed to improve protection level. Connected by special connection plates and bolts.

产品特性 Product Feature

- 半封闭结构，散热性能好
  Semi-enclosed structure, good heat dissipation
- 重量轻，承载能力强
  Light weight, strong load-bearing capacity
- 造型美观，安装方便
  Beautiful appearance, easy installation
- 适用于动力电缆和控制电缆
  Suitable for power cables and control cables
- 热镀锌表面处理，防腐性能好
  Hot dip galvanized surface treatment, excellent corrosion resistance

规格参数表 Specification Table

产品代号 Model No.	规格 W×H (mm) Spec W×H	板厚 (mm) Thickness	底板冲孔 Perforated	镀锌层厚度 (μm) Zinc Coating	重量 (kg/m)Weight	荷载等级 Load Grade
XQJ-P-01	100×50	1.0	有/Yes	≥65	2.8	A级
XQJ-P-02	100×100	1.0	有/Yes	≥65	3.8	A级
XQJ-P-03	150×75	1.0	有/Yes	≥65	4.2	A级
XQJ-P-04	150×100	1.2	有/Yes	≥65	5.5	B级
XQJ-P-05	200×100	1.2	有/Yes	≥65	6.8	B级
XQJ-P-06	200×150	1.5	有/Yes	≥65	9.5	B级
XQJ-P-07	300×100	1.5	有/Yes	≥65	9.8	C级
XQJ-P-08	300×150	1.5	有/Yes	≥65	12.2	C级
XQJ-P-09	400×100	2.0	有/Yes	≥65	13.5	C级
XQJ-P-10	400×150	2.0	有/Yes	≥65	16.8	D级

镀锌梯式电缆桥架示意图
Galvanized Ladder Type Cable Tray

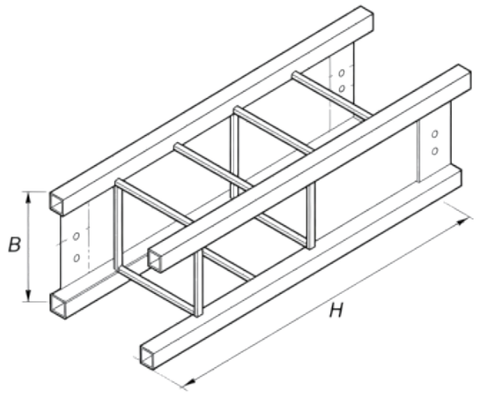

用途 Application

梯式电缆桥架适用于一般直径较大电缆的敷设，特别适用于高、低压动力电缆的敷设。广泛应用于发电厂、变电站、工矿企业、市政工程等大截面动力电缆敷设场景

Ladder type cable tray is suitable for laying cables with larger diameters, especially for high and low voltage power cables. Widely used in large cross-section power cable laying scenarios such as power plants, substations, industrial and mining enterprises, municipal engineering, etc.

结构 Construction

采用两侧边梁加底部横档的梯式结构，边梁为冷轧钢板折弯成型，横档为钢板或型钢。整体呈梯子形状，具有开放式结构，通风散热性能优异。横档间距可根据需要定制

Adopts ladder structure with two side beams and bottom rungs. Side beams are formed by bending cold-rolled steel plate, rungs are made of steel plate or section steel. Overall ladder shape with open structure, excellent ventilation and heat dissipation performance. Rung spacing can be customized as needed.

产品特性 Product Feature

- 开放式结构，散热通风性能优异
  Open structure, excellent heat dissipation and ventilation
- 重量轻，承载能力强
  Light weight, strong load-bearing capacity
- 适合大截面动力电缆敷设
  Suitable for large cross-section power cable laying
- 横档间距可定制
  Rung spacing can be customized
- 热镀锌表面处理，防腐性能好
  Hot dip galvanized surface treatment, excellent corrosion resistance

规格参数表 Specification Table

产品代号 Model No.	规格 W×H (mm) Spec W×H	板厚 (mm) Thickness	横档间距 (mm) Rung Spacing	镀锌层厚度 (μm) Zinc Coating	重量 (kg/m)Weight	荷载等级 Load Grade
XQJ-L-01	200×100	1.5	250	≥65	5.8	B级
XQJ-L-02	200×150	1.5	250	≥65	6.8	B级
XQJ-L-03	300×100	1.5	250	≥65	7.5	C级
XQJ-L-04	300×150	2.0	250	≥65	9.8	C级
XQJ-L-05	400×100	2.0	300	≥65	9.5	C级
XQJ-L-06	400×150	2.0	300	≥65	11.8	D级
XQJ-L-07	400×200	2.0	300	≥65	14.2	D级
XQJ-L-08	500×100	2.0	300	≥65	11.5	D级
XQJ-L-09	500×150	2.5	300	≥65	15.8	D级
XQJ-L-10	500×200	2.5	300	≥65	18.5	D级

镀锌网格式电缆桥架示意图
Galvanized Wire Mesh Cable Tray Diagram

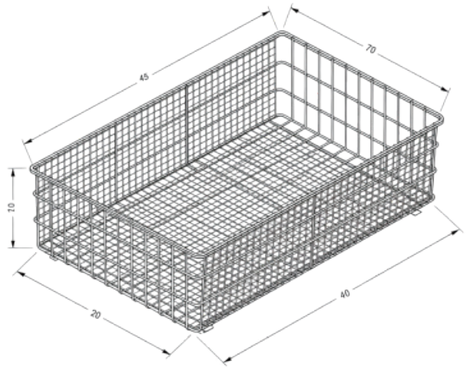

用途 Application

网格式电缆桥架是一种新型的电缆桥架产品，广泛应用于数据中心、通信机房、办公楼、医院等场所的综合布线系统。特别适合弱电系统、通信系统、计算机网络系统的电缆敷设

Wire mesh cable tray is a new type of cable tray product, widely used in structured cabling systems in data centers, communication rooms, office buildings, hospitals and other places. Especially suitable for cable laying of weak current systems, communication systems, and computer network systems.

结构 Construction

采用优质钢丝焊接而成，整体呈网状篮筐结构。钢丝经焊接连接形成网格，两侧有向上翻边的边丝。底部为平面网格结构，具有良好的通风散热性能。可现场切割，安装灵活

Made of high-quality steel wire by welding, overall mesh basket structure. Steel wires are welded to form a grid, with upward turned edge wires on both sides. The bottom is a flat grid structure with good ventilation and heat dissipation performance. Can be cut on site, flexible installation.

产品特性 Product Feature

- 网状结构，重量轻，通风散热好
  Mesh structure, light weight, good ventilation and heat dissipation
- 安装灵活，可现场切割
  Flexible installation, can be cut on site
- 电缆固定方便，便于维护
  Convenient cable fixing, easy maintenance
- 开放式设计，便于电缆增减
  Open design, easy cable addition and removal
- 热镀锌表面处理，防腐性能好
  Hot dip galvanized surface treatment, excellent corrosion resistance

规格参数表 Specification Table

产品代号 Model No.	规格 W×H (mm) Spec W×H	钢丝直径 (mm) Wire Diameter	网格尺寸 (mm) Mesh Size	镀锌层厚度 (μm) Zinc Coating	重量 (kg/m)Weight	荷载等级 Load Grade
XQJ-W-01	50×30	3.0	50×100	≥65	0.8	A级
XQJ-W-02	100×30	3.0	50×100	≥65	1.2	A级
XQJ-W-03	100×50	3.5	50×100	≥65	1.8	A级
XQJ-W-04	150×50	3.5	50×100	≥65	2.2	A级
XQJ-W-05	200×50	4.0	50×100	≥65	2.8	B级
XQJ-W-06	200×100	4.0	50×100	≥65	3.8	B级
XQJ-W-07	300×50	4.0	50×100	≥65	3.5	B级
XQJ-W-08	300×100	4.5	50×100	≥65	5.2	B级
XQJ-W-09	400×50	4.5	50×100	≥65	4.5	C级
XQJ-W-10	400×100	4.5	50×100	≥65	6.5	C级

VOLINIX

喷塑电缆桥架系列

POWDER COATED CABLE TRAY SERIES

章节概述 CHAPTER OVERVIEW:

喷塑电缆桥架是在镀锌桥架表面进行静电粉末喷涂处理，涂层均匀致密，附着力强。粉末涂料经高温固化形成坚硬的保护膜，具有良好的装饰性和防腐性。色彩丰富，可与建筑装饰风格协调统一，适用于室内、干燥环境

Powder coated cable tray applies electrostatic powder coating on the surface of galvanized cable tray, with uniform and dense coating and strong adhesion. Powder coating forms a hard protective film after high-temperature curing, with good decoration and corrosion resistance. Rich colors, can be coordinated with architectural decoration style, suitable for indoor, dry environments.

喷塑槽式电缆桥架示意图
Powder Coated Trough Type Cable Tray Diagram

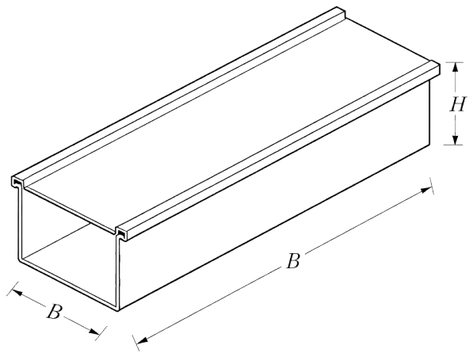

用途 Application

喷塑槽式电缆桥架适用于室内环境下的控制电缆、信号电缆敷设，特别适用于对外观有要求的场所，如办公楼、商场、医院、数据中心等。全封闭结构有效保护电缆，同时美观的外观可与建筑装饰协调

Powder coated trough type cable tray is suitable for indoor control cable and signal cable laying, especially suitable for places with appearance requirements, such as office buildings, shopping malls, hospitals, data centers, etc. Fully enclosed structure effectively protects cables, while beautiful appearance can be coordinated with architectural decoration.

结构 Construction

采用优质冷轧钢板一次冲压成型，表面经静电粉末喷涂处理。整体为槽型结构，配有盖板。涂层均匀致密，附着力强，色彩丰富可选。可根据需要加装分隔板，实现强弱电分离敷设

Made of high-quality cold-rolled steel plate by one-time stamping, surface treated with electrostatic powder coating. Overall trough structure with cover. Uniform and dense coating, strong adhesion, rich colors to choose from. Dividers can be installed as needed to realize separate laying of strong and weak current cables.

产品特性 Product Feature

- 全封闭结构，防尘、防干扰性能好
  Fully enclosed structure, excellent dust-proof and anti-interference performance
- 喷塑涂层均匀致密，装饰性好
  Uniform and dense powder coating, good decoration
- 色彩丰富，RAL全系列可选
  Rich colors, full RAL series available
- 可配分隔板，实现强弱电分离
  Can be equipped with dividers for strong and weak current separation
- 适用于室内干燥环境，美观大方
  Suitable for indoor dry environments, beautiful and elegant

规格参数表 Specification Table

产品代号 Model No.	规格 W×H (mm) Spec W×H	板厚 (mm) Thickness	盖板厚度 (mm) Cover Thickness	喷塑涂层厚度 (μm) Coating Thickness	重量 (kg/m)Weight	荷载等级 Load Grade
XQJ-P-01	100×50	1.0	0.8	≥60	3.3	A级
XQJ-P-02	100×100	1.0	0.8	≥60	4.6	A级
XQJ-P-03	150×75	1.0	0.8	≥60	4.9	A级
XQJ-P-04	150×100	1.2	1.0	≥60	6.3	B级
XQJ-P-05	200×100	1.2	1.0	≥60	7.6	B级
XQJ-P-06	200×150	1.5	1.2	≥60	10.9	B级
XQJ-P-07	300×100	1.5	1.2	≥60	11.3	C级
XQJ-P-08	300×150	1.5	1.2	≥60	13.6	C级
XQJ-P-09	400×100	2.0	1.5	≥60	15.9	C级
XQJ-P-10	400×150	2.0	1.5	≥60	18.6	D级

喷塑托盘式电缆桥架示意图
Powder Coated Tray Type Cable Tray

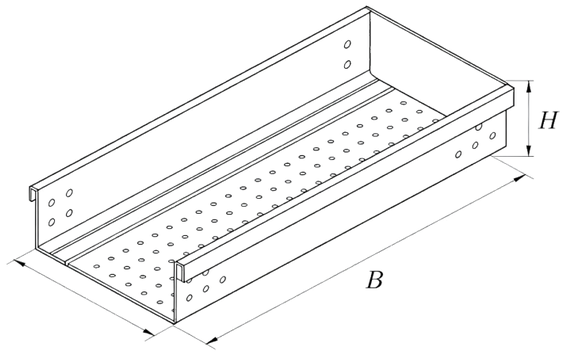

用途 Application

喷塑托盘式电缆桥架广泛应用于室内动力电缆和控制电缆的敷设，特别适用于对外观有要求的商业建筑、办公楼、数据中心等场所。半封闭结构兼顾散热和防护，美观的外观可与建筑装饰协调统一

Powder coated tray type cable tray is widely used for indoor power cable and control cable laying, especially suitable for commercial buildings, office buildings, data centers and other places with appearance requirements. Semi-enclosed structure balances heat dissipation and protection, beautiful appearance can be coordinated with architectural decoration.

结构 Construction

采用优质冷轧钢板冲压成型，底板带有冲孔，两侧有侧板。表面经静电粉末喷涂处理，涂层均匀致密。整体呈托盘状结构，具有良好的散热性能。可根据需要选配盖板，提高防护等级

Made of high-quality cold-rolled steel plate by stamping, with perforated bottom plate and side plates on both sides. Surface treated with electrostatic powder coating, uniform and dense coating. Overall tray-shaped structure with good heat dissipation performance. Cover can be selected as needed to improve protection level.

产品特性 Product Feature

- 半封闭结构，散热性能好
  Semi-enclosed structure, good heat dissipation
- 喷塑涂层均匀致密，装饰性好
  Uniform and dense powder coating, good decoration
- 色彩丰富，可与建筑风格协调
  Rich colors, can be coordinated with architectural style
- 适用于动力电缆和控制电缆
  Suitable for power cables and control cables
- 安装方便，维护简单
  Easy installation, simple maintenance

规格参数表 Specification Table

产品代号 Model No.	规格 W×H (mm) Spec W×H	板厚 (mm) Thickness	底板冲孔 Perforated	喷塑涂层厚度 (μm) Coating Thickness	重量 (kg/m)Weight	荷载等级 Load Grade
XQJ-P-P-01	100×50	1.0	有/Yes	≥60	2.9	A级
XQJ-P-P-02	100×100	1.0	有/Yes	≥60	3.9	A级
XQJ-P-P-03	150×75	1.0	有/Yes	≥60	4.3	A级
XQJ-P-P-04	150×100	1.2	有/Yes	≥60	5.6	B级
XQJ-P-P-05	200×100	1.2	有/Yes	≥60	6.9	B级
XQJ-P-P-06	200×150	1.5	有/Yes	≥60	9.6	B级
XQJ-P-P-07	300×100	1.5	有/Yes	≥60	9.9	C级
XQJ-P-P-08	300×150	1.5	有/Yes	≥60	12.3	C级
XQJ-P-P-09	400×100	2.0	有/Yes	≥60	13.6	C级
XQJ-P-P-10	400×150	2.0	有/Yes	≥60	16.9	D级

喷塑梯式电缆桥架示意图
Powder Coated Ladder Type Cable Tray Diagram

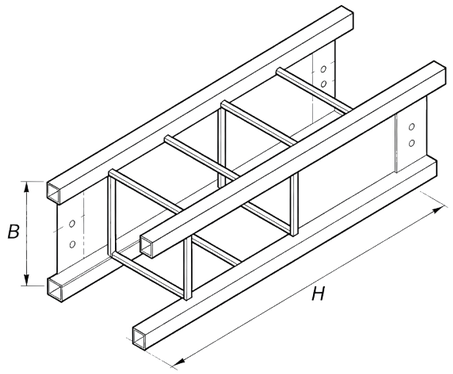

用途 Application

喷塑梯式电缆桥架适用于室内大直径动力电缆的敷设，特别适用于对外观有要求的场所。开放式结构通风散热性能优异，美观的喷塑外观可与建筑装饰风格协调统一

Powder coated ladder type cable tray is suitable for indoor large diameter power cable laying, especially suitable for places with appearance requirements. Open structure has excellent ventilation and heat dissipation performance, beautiful powder coated appearance can be coordinated with architectural decoration style.

结构 Construction

采用两侧边梁加底部横档的梯式结构，边梁为冷轧钢板折弯成型，横档为钢板或型钢。表面经静电粉末喷涂处理，涂层均匀致密。整体呈梯子形状，具有开放式结构，通风散热性能优异

Adopts ladder structure with two side beams and bottom rungs. Side beams are formed by bending cold-rolled steel plate, rungs are made of steel plate or section steel. Surface treated with electrostatic powder coating, uniform and dense coating. Overall ladder shape with open structure, excellent ventilation and heat dissipation performance.

产品特性 Product Feature

- 开放式结构，散热通风性能优异
  Open structure, excellent heat dissipation and ventilation
- 喷塑涂层均匀致密，美观大方
  Uniform and dense powder coating, beautiful and elegant
- 色彩丰富，可定制颜色
  Rich colors, customizable colors
- 适合大截面动力电缆敷设
  Suitable for large cross-section power cable laying
- 安装维护方便
  Easy installation and maintenance

规格参数表 Specification Table

产品代号 Model No.	规格 W×H (mm) Spec W×H	板厚 (mm) Thickness	横档间距 (mm) Rung Spacing	喷塑涂层厚度 (μm) Coating Thickness	重量 (kg/m)Weight	荷载等级 Load Grade
XQJ-T-P-01	200×100	1.5	250	≥60	5.9	B级
XQJ-T-P-02	200×150	1.5	250	≥60	6.9	B级
XQJ-T-P-03	300×100	1.5	250	≥60	7.6	C级
XQJ-T-P-04	300×150	2.0	250	≥60	9.9	C级
XQJ-T-P-05	400×100	2.0	300	≥60	9.6	C级
XQJ-T-P-06	400×150	2.0	300	≥60	11.9	D级
XQJ-T-P-07	400×200	2.0	300	≥60	14.3	D级
XQJ-T-P-08	500×100	2.0	300	≥60	11.6	D级
XQJ-T-P-09	500×150	2.5	300	≥60	15.9	D级
XQJ-T-P-10	500×200	2.5	300	≥60	18.6	D级

喷塑网格式电缆桥架示意图
Powder Coated Wire Mesh Cable Tray Diagram

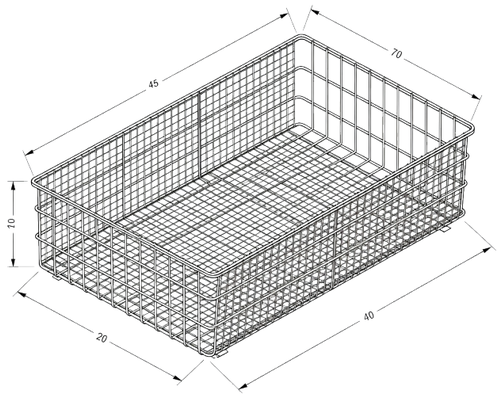

用途 Application

喷塑网格式电缆桥架广泛应用于数据中心、通信机房、办公楼等场所的综合布线系统。特别适合弱电系统、通信系统的电缆敷设。美观的喷塑外观可与室内装饰风格协调统一

Powder coated wire mesh cable tray is widely used in structured cabling systems in data centers, communication rooms, office buildings and other places. Especially suitable for cable laying of weak current systems and communication systems. Beautiful powder coated appearance can be coordinated with interior decoration style.

结构 Construction

采用优质钢丝焊接而成，整体呈网状篮筐结构。表面经静电粉末喷涂处理，涂层均匀致密。钢丝经焊接连接形成网格，两侧有向上翻边的边丝。底部为平面网格结构，具有良好的通风散热性能

Made of high-quality steel wire by welding, overall mesh basket structure. Surface treated with electrostatic powder coating, uniform and dense coating. Steel wires are welded to form a grid, with upward turned edge wires on both sides. The bottom is a flat grid structure with good ventilation and heat dissipation performance.

产品特性 Product Feature

- 网状结构，重量轻，通风散热好
  Mesh structure, light weight, good ventilation and heat dissipation
- 喷塑涂层均匀致密，美观大方
  Uniform and dense powder coating, beautiful and elegant
- 安装灵活，可现场切割
  Flexible installation, can be cut on site
- 电缆固定方便，便于维护
  Convenient cable fixing, easy maintenance
- 色彩丰富，可定制颜色
  Rich colors, customizable colors

规格参数表 Specification Table

产品代号 Model No.	规格 W×H (mm) Spec W×H	钢丝直径 (mm) Wire Diameter	网格尺寸 (mm) Mesh Size	喷塑涂层厚度 (μm) Coating Thickness	重量 (kg/m)Weight	荷载等级 Load Grade
WG-P-01	50×30	3.0	50×100	≥60	0.9	A级
WG-P-02	100×30	3.0	50×100	≥60	1.3	A级
WG-P-03	100×50	3.5	50×100	≥60	1.9	A级
WG-P-04	150×50	3.5	50×100	≥60	2.3	A级
WG-P-05	200×50	4.0	50×100	≥60	2.9	B级
WG-P-06	200×100	4.0	50×100	≥60	3.9	B级
WG-P-07	300×50	4.0	50×100	≥60	3.6	B级
WG-P-08	300×100	4.5	50×100	≥60	5.3	B级
WG-P-09	400×50	4.5	50×100	≥60	4.6	C级
WG-P-10	400×100	4.5	50×100	≥60	6.6	C级

VOLINIX

热浸锌电缆桥架系列

HOT DIP ZINC COATED CABLE TRAY SERIES

章节概述 CHAPTER OVERVIEW:

热浸锌电缆桥架采用优质钢材制造，将工件浸入熔融的锌液中，使锌层均匀覆盖在钢材表面。锌层厚度均匀，附着力强，具有优异的防腐性能。适用于室外、沿海、工业腐蚀等恶劣环境，使用寿命可达25年以上

Hot dip zinc coated cable tray is made of high-quality steel, by immersing the workpiece in molten zinc liquid, so that the zinc layer evenly covers the steel surface. Uniform zinc layer thickness, strong adhesion, with excellent corrosion resistance. Suitable for outdoor, coastal, industrial corrosion and other harsh environments, service life up to more than 25 years.

热浸锌槽式电缆桥架示意图
Hot Dip Zinc Trough Type Cable Tray Diagram

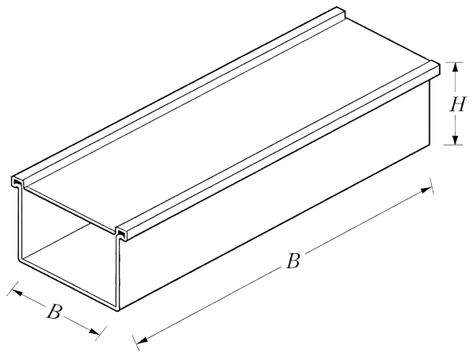

用途 Application

热浸锌槽式电缆桥架适用于室外、沿海、化工等强腐蚀环境下的电缆敷设。全封闭结构有效保护电缆，热浸锌表面处理提供卓越的防腐性能，是恶劣环境下电缆保护的理想选择

Hot dip zinc trough type cable tray is suitable for cable laying in outdoor, coastal, chemical and other strong corrosion environments. Fully enclosed structure effectively protects cables, hot dip zinc surface treatment provides excellent corrosion resistance, is the ideal choice for cable protection in harsh environments.

结构 Construction

采用优质钢板一次冲压成型，整体浸入熔融锌液中进行热浸锌处理。锌层均匀覆盖，无死角，与钢材形成冶金结合。整体为槽型结构，配有盖板。可根据需要加装分隔板，实现强弱电分离敷设

Made of high-quality steel plate by one-time stamping, the whole is immersed in molten zinc liquid for hot dip zinc treatment. Uniform zinc layer coverage, no dead corners, forms metallurgical bonding with steel. Overall trough structure with cover. Dividers can be installed as needed to realize separate laying of strong and weak current cables.

产品特性 Product Feature

- 全封闭结构，防尘、防干扰性能好
  Fully enclosed structure, excellent dust-proof and anti-interference performance
- 热浸锌处理，锌层均匀无死角
  Uniform and dense powder coating, good decoration
- 锌层厚度≥85μm，防腐性能更优异
  Zinc layer thickness ≥85μm, better corrosion resistance
- 冶金结合，附着力强，不易脱落
  Metallurgical bonding, strong adhesion, not easy to fall off
- 适用于室外、沿海、重腐蚀环境
  Suitable for outdoor, coastal, heavy corrosion environments

规格参数表 Specification Table

产品代号 Model No.	规格 W×H (mm) Spec W×H	板厚 (mm) Thickness	盖板厚度 (mm) Cover Thickness	热浸锌层厚度 (μm) Zinc Coating	重量 (kg/m)Weight	荷载等级 Load Grade
XQJ-C-HD-01	100×50	1.2	1.0	≥85	3.8	A级
XQJ-C-HD-02	100×100	1.2	1.0	≥85	5.2	A级
XQJ-C-HD-03	150×75	1.2	1.0	≥85	5.5	A级
XQJ-C-HD-04	150×100	1.5	1.2	≥85	7.2	B级
XQJ-C-HD-05	200×100	1.5	1.2	≥85	8.6	B级
XQJ-C-HD-06	200×150	1.8	1.5	≥85	12.5	B级
XQJ-C-HD-07	300×100	1.8	1.5	≥85	12.8	C级
XQJ-C-HD-08	300×150	1.8	1.5	≥85	15.5	C级
XQJ-C-HD-09	400×100	2.2	1.8	≥85	18.2	C级
XQJ-C-HD-10	400×150	2.2	1.8	≥85	21.2	D级

热浸锌托盘式电缆桥架示意图
Hot Dip Zinc Tray Type Cable Tray Diagram

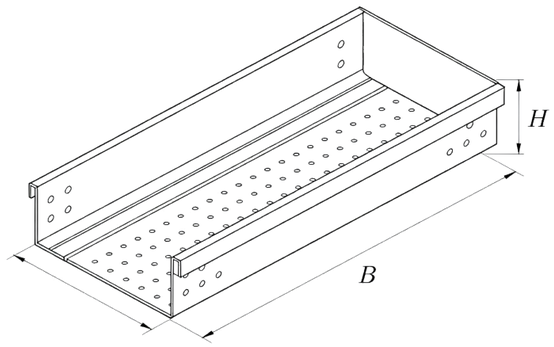

用途 Application

热浸锌托盘式电缆桥架适用于室外、沿海、化工等腐蚀环境下的动力电缆和控制电缆敷设。半封闭结构兼顾散热和防护，热浸锌表面处理提供卓越的防腐性能，是户外电缆敷设的理想选择

Hot dip zinc tray type cable tray is suitable for power cable and control cable laying in outdoor, coastal, chemical and other corrosion environments. Semi-enclosed structure balances heat dissipation and protection, hot dip zinc surface treatment provides excellent corrosion resistance, is the ideal choice for outdoor cable laying.

结构 Construction

采用优质钢板冲压成型，底板带有冲孔，两侧有侧板。整体浸入熔融锌液中进行热浸锌处理，锌层均匀覆盖。整体呈托盘状结构，具有良好的散热性能。可根据需要选配盖板，提高防护等级

Made of high-quality steel plate by stamping, with perforated bottom plate and side plates on both sides. The whole is immersed in molten zinc liquid for hot dip zinc treatment, uniform zinc layer coverage. Overall tray-shaped structure with good heat dissipation performance. Cover can be selected as needed to improve protection level.

产品特性 Product Feature

- 半封闭结构，散热性能好
  Semi-enclosed structure, good heat dissipation
- 热浸锌处理，锌层均匀无死角
  Hot dip zinc treatment, uniform zinc layer without dead corners
- 锌层厚度≥85μm，防腐性能优异
  Zinc layer thickness ≥85μm, excellent corrosion resistance
- 重量轻，承载能力强
  Light weight, strong load-bearing capacity
- 适用于室外、沿海、重腐蚀环境
  Suitable for outdoor, coastal, heavy corrosion environments

规格参数表 Specification Table

产品代号 Model No.	规格 W×H (mm) Spec W×H	板厚 (mm) Thickness	底板冲孔 Perforated	热浸锌层厚度 (μm) Zinc Coating	重量 (kg/m)Weight	荷载等级 Load Grade
XQJ-P-HD-01	100×50	1.2	有/Yes	≥85	3.3	A级
XQJ-P-HD-02	100×100	1.2	有/Yes	≥85	4.5	A级
XQJ-P-HD-03	150×75	1.2	有/Yes	≥85	4.8	A级
XQJ-P-HD-04	150×100	1.5	有/Yes	≥85	6.3	B级
XQJ-P-HD-05	200×100	1.5	有/Yes	≥85	7.8	B级
XQJ-P-HD-06	200×150	1.8	有/Yes	≥85	11.0	B级
XQJ-P-HD-07	300×100	1.8	有/Yes	≥85	11.3	C级
XQJ-P-HD-08	300×150	1.8	有/Yes	≥85	14.0	C级
XQJ-P-HD-09	400×100	2.2	有/Yes	≥85	15.5	C级
XQJ-P-HD-10	400×150	2.2	有/Yes	≥85	19.2	D级

热浸锌梯式电缆桥架示意图
Hot Dip Zinc Ladder Type Cable Tray Diagram

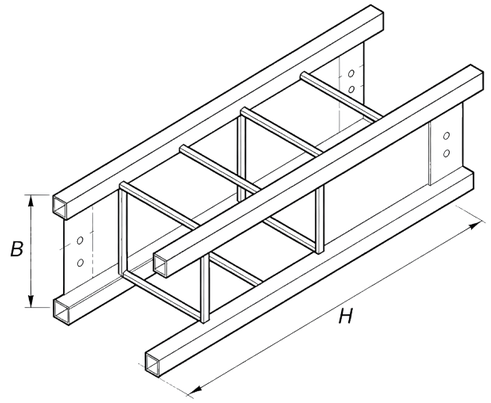

用途 Application

热浸锌梯式电缆桥架适用于室外、沿海、工矿企业等恶劣环境下的大直径动力电缆敷设。开放式结构通风散热性能优异，热浸锌表面处理提供卓越的防腐性能，使用寿命长

Hot dip zinc ladder type cable tray is suitable for large diameter power cable laying in outdoor, coastal, industrial and mining enterprises and other harsh environments. Open structure has excellent ventilation and heat dissipation performance, hot dip zinc surface treatment provides excellent corrosion resistance, long service life.

结构 Construction

采用两侧边梁加底部横档的梯式结构，整体浸入熔融锌液中进行热浸锌处理。锌层均匀覆盖，无死角，与钢材形成冶金结合。整体呈梯子形状，具有开放式结构，通风散热性能优异

Adopts ladder structure with two side beams and bottom rungs, the whole is immersed in molten zinc liquid for hot dip zinc treatment. Uniform zinc layer coverage, no dead corners, forms metallurgical bonding with steel. Overall ladder shape with open structure, excellent ventilation and heat dissipation performance.

产品特性 Product Feature

- 开放式结构，散热通风性能优异
  Open structure, excellent heat dissipation and ventilation
- 热浸锌处理，锌层均匀无死角
  Hot dip zinc treatment, uniform zinc layer without dead corners
- 锌层厚度≥85μm，防腐性能优异
  Zinc layer thickness ≥85μm, excellent corrosion resistance
- 适合大截面动力电缆敷设
  Suitable for large cross-section power cable laying
- 使用寿命可达25年以上
  Service life up to more than 25 years

规格参数表 Specification Table

产品代号 Model No.	规格 W×H (mm) Spec W×H	板厚 (mm) Thickness	横档间距 (mm) Rung Spacing	热浸锌层厚度 (μm) Zinc Coating	重量 (kg/m)Weight	荷载等级 Load Grade
XQJ-T-HD-01	200×100	1.8	250	≥85	6.8	B级
XQJ-T-HD-02	200×150	1.8	250	≥85	7.8	B级
XQJ-T-HD-03	300×100	1.8	250	≥85	8.6	C级
XQJ-T-HD-04	300×150	2.2	250	≥85	11.2	C级
XQJ-T-HD-05	400×100	2.2	300	≥85	10.8	C级
XQJ-T-HD-06	400×150	2.2	300	≥85	13.5	D级
XQJ-T-HD-07	400×200	2.2	300	≥85	16.2	D级
XQJ-T-HD-08	500×100	2.2	300	≥85	13.2	D级
XQJ-T-HD-09	500×150	2.8	300	≥85	18.0	D级
XQJ-T-HD-10	500×200	2.8	300	≥85	21.2	D级

VOLINIX

防火电缆桥架系列

HOT DIP ZINC COATED CABLE TRAY SERIES

章节概述 CHAPTER OVERVIEW:

防火电缆桥架适用于消防泵、消防电梯、应急照明、消防控制中心等重要消防设施的电缆敷设。能在火灾情况下保证电缆正常运行一定时间，为消防救援和人员疏散争取时间

Fire resistant cable tray is suitable for cable laying of important fire protection facilities such as fire pumps, fire elevators, emergency lighting, and fire control centers. It can ensure normal cable operation for a certain time in case of fire, buying time for fire rescue and personnel evacuation.

防火槽式电缆桥架示意图
Fire Resistant Trough Type Cable Tray Diagram

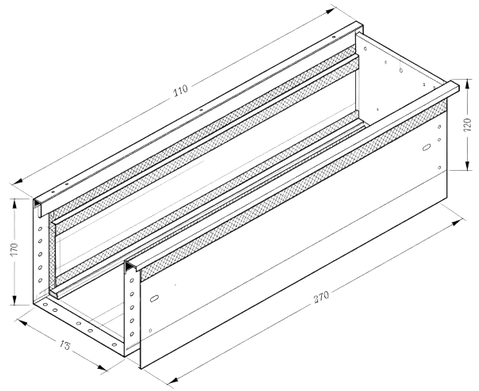

用途 Application

防火槽式电缆桥架适用于消防系统、应急电源、重要控制线路等关键设施的电缆敷设。能在火灾情况下保证电缆正常运行30-90分钟，为消防救援和人员疏散争取宝贵时间

Fire resistant trough type cable tray is suitable for cable laying of key facilities such as fire protection systems, emergency power supplies, and important control lines. It can ensure normal cable operation for 30-90 minutes in case of fire, buying precious time for fire rescue and personnel evacuation.

结构 Construction

采用钢制外壳，内部填充防火隔热材料，表面涂覆防火涂料。整体为槽型结构，具有优良的防火阻燃性能。耐火极限分为30分钟、60分钟、90分钟三个等级，可根据工程需要选择

Adopts steel shell, filled with fireproof and heat insulation materials inside, and coated with fire retardant paint on the surface. Overall trough structure with excellent fire resistance and flame retardant properties. Fire resistance limit is divided into three grades: 30 minutes, 60 minutes, 90 minutes, can be selected according to engineering needs.

产品特性 Product Feature

- 钢制外壳+防火隔热层，防火性能优异
  Steel shell + fireproof insulation layer, excellent fire resistance
- 耐火极限可达30/60/90分钟
  Fire resistance limit up to 30/60/90 minutes
- 表面防火涂料，阻燃性能好
  Fire retardant paint on surface, good flame retardant performance
- 适用于消防系统、应急电源等重要线路
  Suitable for important lines such as fire protection systems and emergency power supplies
- 全封闭结构，防护等级高
  Fully enclosed structure, high protection level

规格参数表 Specification Table

产品代号 Model No.	规格 W×H (mm) Spec W×H	板厚 (mm) Thickness	耐火极限 (min) Fire Resistance	重量 (kg/m)Weight	防火等级 Fire Grade
FQJ-01	100×100	1.2	30	8.5	B级
FQJ-02	150×100	1.2	30	10.2	B级
FQJ-03	200×100	1.5	30	12.8	B级
FQJ-04	200×150	1.5	60	16.5	A级
FQJ-05	300×100	1.5	30	15.2	B级
FQJ-06	300×150	2.0	60	20.8	A级
FQJ-07	300×200	2.0	60	24.5	A级
FQJ-08	400×100	2.0	30	18.5	B级
FQJ-09	400×150	2.0	60	25.2	A级
FQJ-10	400×200	2.5	90	32.8	A级

防火涂料型电缆桥架示意图
Fire Retardant Coated Cable Tray Diagram

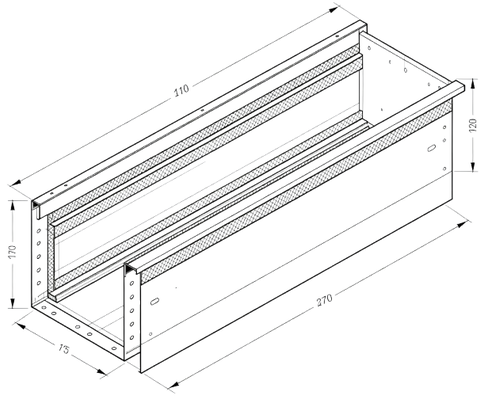

用途 Application

防火涂料型电缆桥架是在普通桥架表面涂覆专用防火涂料，形成防火保护层。适用于对防火有一定要求但不需要高耐火极限的场所，如一般工业建筑、商业建筑的电缆敷设。经济实用，安装方便

Fire retardant coated cable tray applies special fire retardant paint on the surface of ordinary cable tray to form a fire protection layer. Suitable for places with certain fire protection requirements but not requiring high fire resistance limit, such as general industrial buildings, commercial building cable laying. Economical and practical, easy to install.

结构 Construction

采用优质冷轧钢板冲压成型，表面涂覆专用膨胀型防火涂料。遇火时涂料膨胀发泡，形成隔热层，延缓桥架温度上升。整体结构与普通桥架相同，施工安装方便，可直接替代普通桥架使用

Made of high-quality cold-rolled steel plate by stamping, surface coated with special intumescent fire retardant paint. When exposed to fire, the paint expands and foams, forming a heat insulation layer, delaying the temperature rise of the cable tray. Overall structure is the same as ordinary cable tray, convenient construction and installation, can directly replace ordinary cable tray.

产品特性 Product Feature

- 表面涂覆防火涂料，具有阻燃性能
  Surface coated with fire retardant paint, has flame retardant performance
- 遇火膨胀发泡，形成隔热保护层
  Expands and foams when exposed to fire, forms heat insulation protection layer
- 结构与普通桥架相同，安装方便
  Same structure as ordinary cable tray, easy to install
- 经济实用，性价比高
  Economical and practical, high cost-effectiveness
- 适用于一般防火要求的场所
  Suitable for places with general fire protection requirements

规格参数表 Specification Table

产品代号 Model No.	规格 W×H (mm) Spec W×H	板厚 (mm) Thickness	防火涂料厚度 (mm) Coating Thickness	耐火极限 (min) Fire Resistance	重量 (kg/m)Weight	防火等级 Fire Grade
FQJ-T-01	100×100	1.2	0.5	30	5.2	B级
FQJ-T-02	150×100	1.2	0.5	30	6.5	B级
FQJ-T-03	200×100	1.5	0.5	30	8.2	B级
FQJ-T-04	200×150	1.5	1.0	30	11.5	A级
FQJ-T-05	300×100	1.5	0.5	30	9.8	B级
FQJ-T-06	300×150	2.0	1.0	30	15.2	A级
FQJ-T-07	300×200	2.0	1.0	30	18.5	A级
FQJ-T-08	400×100	2.0	0.5	30	12.5	B级
FQJ-T-09	400×150	2.0	1.0	30	19.2	A级
FQJ-T-10	400×200	2.5	1.5	30	26.5	A级

VOLINIX

特种电缆桥架系列

SPECIAL CABLE TRAY SERIES

大跨距电缆桥架示意图
Long Span Cable Tray Diagram

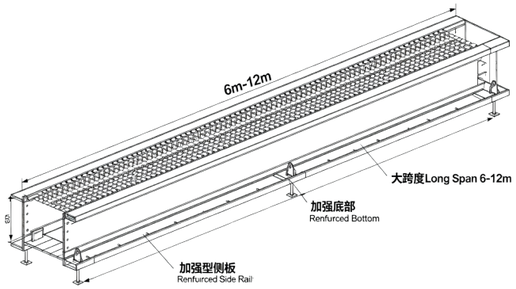

产品特性：承载能力强、跨度大，减少支架、安装快捷
Desetspetme Prouttatregectermome remfurcewise Refurrced trenfurle by Wared Support

用途 Application

大跨距电缆桥架适用于大跨度（4米、6米、8米）的电缆敷设场景，特别适用于厂房、隧道、管廊等大跨度场所。可减少支吊架数量，降低安装成本，提高施工效率

Long span cable tray is suitable for large span (4m, 6m, 8m) cable laying scenarios, especially suitable for large span places such as factories, tunnels, and pipe galleries. Can reduce the number of supports and hangers, lower installation costs, and improve construction efficiency.

结构 Construction

采用高强度钢材，经过特殊加强处理，边梁采用加强型结构设计。整体结构经过力学计算优化，确保在大跨距下仍具有足够的承载能力和刚度。可定制跨度，满足不同工程需求

Made of high-strength steel with special reinforcement treatment, side beams adopt reinforced structure design. The overall structure is optimized by mechanical calculation, ensuring sufficient load-bearing capacity and rigidity even under large span. Span can be customized to meet different engineering needs.

产品特性 Product Feature

- 大跨度设计，减少支架数量
  Large span design, reducing the number of supports
- 高强度钢材，承载能力强
  High-strength steel, strong load-bearing capacity
- 适用于厂房、隧道等大跨度场所
  Suitable for large span places such as factories and tunnels
- 可定制跨度（4m/6m/8m）
  Customizable span (4m/6m/8m)
- 安装快捷，降低施工成本
  Quick installation, reducing construction costs

规格参数表 Specification Table

产品代号 Model No.	规格 W×H (mm) Spec W×H	板厚 (mm) Thickness	跨距 (m) Span	重量 (kg/m)Weight	均布荷载 (N/m) Uniform Load
DJ-01	200×100	2.0	4	8.5	1500
DJ-02	200×150	2.0	4	10.2	1500
DJ-03	300×100	2.0	4	12.8	2000
DJ-04	300×150	2.5	4	14.5	2000
DJ-05	400×100	2.5	4	13.5	2500
DJ-06	400×150	2.5	4	16.8	2500
DJ-07	400×200	3.0	4	21.2	2500
DJ-08	500×100	2.5	6	16.5	1500
DJ-09	500×150	3.0	6	22.8	1500
DJ-10	500×200	3.0	6	26.5	1500

铝合金电缆桥架示意图
Aluminum Alloy Cable Tray Diagram

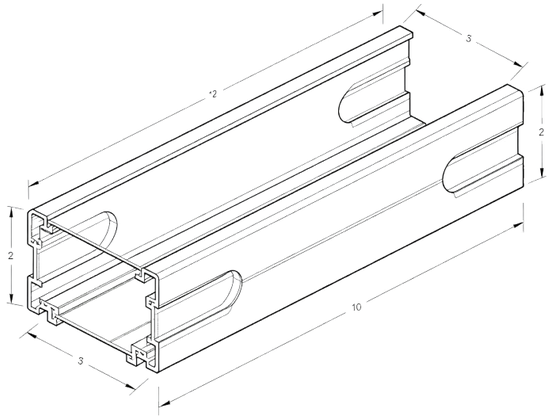

用途 Application

铝合金电缆桥架适用于高腐蚀环境和对重量有要求的场所，如沿海地区、化工厂、食品加工厂、高层建筑等。重量轻，便于安装，特别适合对荷载有限制的建筑结构

Aluminum alloy cable tray is suitable for high corrosion environments and places with weight requirements, such as coastal areas, chemical plants, food processing plants, high-rise buildings, etc. Light weight, easy to install, especially suitable for building structures with load restrictions.

结构 Construction

采用6063-T5铝合金型材挤压成型，具有重量轻、强度高的特点。表面经阳极氧化处理，形成致密的氧化膜，具有优异的耐腐蚀性能。铝合金本身具有良好的导电性能，可兼作接地导体

Made of 6063-T5 aluminum alloy profile by extrusion, featuring light weight and high strength. The surface is anodized to form a dense oxide film with excellent corrosion resistance. Aluminum alloy itself has good electrical conductivity and can also serve as a grounding conductor.

产品特性 Product Feature

- 重量轻，约为钢制的1/3
  Light weight, about 1/3 of steel
- 耐腐蚀性能优异，适用于高腐蚀环境
  Excellent corrosion resistance, suitable for high corrosion environments
- 阳极氧化表面处理，美观耐用
  Anodized surface treatment, beautiful and durable
- 导电性能好，可兼作接地导体
  Good electrical conductivity, can also serve as grounding conductor
- 使用寿命可达30年以上
  Service life up to more than 30 years

规格参数表 Specification Table

产品代号 Model No.	规格 W×H (mm) Spec W×H	板厚 (mm) Thickness	材质 Material	表面处理 Surface	重量 (kg/m)Weight	荷载等级 Load Grade
LQJ-C-01	100×50	1.5	6063-T5铝合金	阳极氧化Anodized	2.2	A级
LQJ-C-02	100×100	1.5	6063-T5铝合金	阳极氧化Anodized	3.0	A级
LQJ-C-03	150×75	1.5	6063-T5铝合金	阳极氧化Anodized	3.2	A级
LQJ-C-04	150×100	1.8	6063-T5铝合金	阳极氧化Anodized	4.2	B级
LQJ-C-05	200×100	1.8	6063-T5铝合金	阳极氧化Anodized	5.0	B级
LQJ-C-06	200×150	2.0	6063-T5铝合金	阳极氧化Anodized	7.2	B级
LQJ-C-07	300×100	2.0	6063-T5铝合金	阳极氧化Anodized	7.5	C级
LQJ-C-08	300×150	2.0	6063-T5铝合金	阳极氧化Anodized	9.0	C级
LQJ-C-09	400×100	2.0	6063-T5铝合金	阳极氧化Anodized	9.8	C级
LQJ-C-10	400×150	2.5	6063-T5铝合金	阳极氧化Anodized	12.5	D级
LQJ-C-11	400×200	2.5	6063-T5铝合金	阳极氧化Anodized	14.2	D级
LQJ-C-12	500×100	2.5	6063-T5铝合金	阳极氧化Anodized	12.2	D级
LQJ-C-13	500×150	2.5	6063-T5铝合金	阳极氧化Anodized	14.5	D级
LQJ-C-14	500×200	3.0	6063-T5铝合金	阳极氧化Anodized	19.0	D级
LQJ-C-15	600×100	2.5	6063-T5铝合金	阳极氧化Anodized	14.5	D级
LQJ-C-16	600×150	3.0	6063-T5铝合金	阳极氧化Anodized	19.2	D级
LQJ-C-17	600×200	3.0	6063-T5铝合金	阳极氧化Anodized	21.8	D级
LQJ-C-18	800×150	3.0	6063-T5铝合金	阳极氧化Anodized	24.0	D级
LQJ-C-19	800×200	3.5	6063-T5铝合金	阳极氧化Anodized	30.2	D级

不锈钢电缆桥架示意图
Stainless Steel Cable Tray Diagram

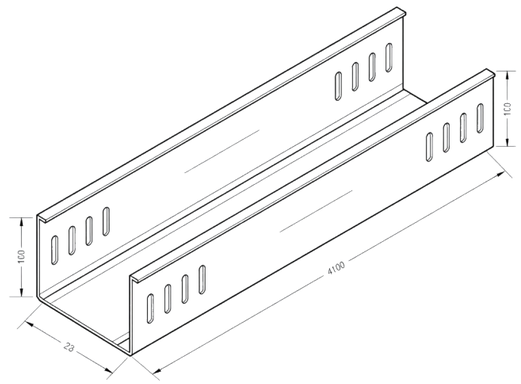

用途 Application

不锈钢电缆桥架适用于强腐蚀环境，如海洋工程、化工厂、制药厂、食品加工厂、污水处理厂等。特别适用于对卫生要求高的食品、医药行业

Stainless steel cable tray is suitable for strong corrosion environments, such as marine engineering, chemical plants, pharmaceutical factories, food processing plants, sewage treatment plants, etc. Especially suitable for food and pharmaceutical industries with high hygiene requirements.

结构 Construction

采用304或316不锈钢板制造，具有优异的耐腐蚀性能和机械强度。表面可做拉丝或抛光处理，美观且易于清洁。不锈钢材质具有良好的耐高温和低温性能，适用温度范围广

Made of 304 or 316 stainless steel plate, with excellent corrosion resistance and mechanical strength. The surface can be brushed or polished, beautiful and easy to clean. Stainless steel material has good high and low temperature resistance, wide application temperature range.

产品特性 Product Feature

- 304/316不锈钢材质，耐腐蚀性能优异
  304/316 stainless steel material, excellent corrosion resistance
- 耐腐蚀等级达C5级，适用于恶劣环境
  Corrosion resistance grade up to C5, suitable for harsh environments
- 表面美观，易于清洁
  Beautiful surface, easy to clean
- 卫生等级高，适用于食品医药行业
  High hygiene grade, suitable for food and pharmaceutical industries
- 使用寿命长，维护成本低
  Long service life, low maintenance cost

规格参数表 Specification Table

产品代号 Model No.	规格 W×H (mm) Spec W×H	板厚 (mm) Thickness	材质 Material	表面处理 Surface	重量 (kg/m)Weight	耐腐蚀等级 Corrosion Grade
BQJ-C-01	100×50	1.0	304不锈钢304 SS	拉丝/抛光 Brushed/Polished	3.5	C5级
BQJ-C-02	100×100	1.0	304不锈钢304 SS	拉丝/抛光 Brushed/Polished	4.8	C5级
BQJ-C-03	150×75	1.0	304不锈钢304 SS	拉丝/抛光 Brushed/Polished	5.0	C5级
BQJ-C-04	150×100	1.2	304不锈钢304 SS	拉丝/抛光 Brushed/Polished	6.5	C5级
BQJ-C-05	200×100	1.2	304不锈钢304 SS	拉丝/抛光 Brushed/Polished	7.8	C5级
BQJ-C-06	200×150	1.5	304不锈钢304 SS	拉丝/抛光 Brushed/Polished	11.2	C5级
BQJ-C-07	300×100	1.5	304不锈钢304 SS	拉丝/抛光 Brushed/Polished	11.5	C5级
BQJ-C-08	300×150	1.5	304不锈钢304 SS	拉丝/抛光 Brushed/Polished	14.0	C5级
BQJ-C-09	400×100	2.0	304不锈钢304 SS	拉丝/抛光 Brushed/Polished	16.5	C5级
BQJ-C-10	400×150	2.0	304不锈钢304 SS	拉丝/抛光 Brushed/Polished	19.2	C5级
BQJ-C-11	400×200	2.0	304不锈钢304 SS	拉丝/抛光 Brushed/Polished	22.0	C5级
BQJ-C-12	500×100	2.0	304不锈钢304 SS	拉丝/抛光 Brushed/Polished	19.2	C5级
BQJ-C-13	500×150	2.0	304不锈钢304 SS	拉丝/抛光 Brushed/Polished	22.5	C5级
BQJ-C-14	500×200	2.5	304不锈钢304 SS	拉丝/抛光 Brushed/Polished	29.5	C5级
BQJ-C-15	600×100	2.0	304不锈钢304 SS	拉丝/抛光 Brushed/Polished	22.2	C5级
BQJ-C-16	600×150	2.5	304不锈钢304 SS	拉丝/抛光 Brushed/Polished	29.8	C5级
BQJ-C-17	600×200	2.5	304不锈钢304 SS	拉丝/抛光 Brushed/Polished	33.5	C5级
BQJ-C-18	800×150	2.5	304不锈钢304 SS	拉丝/抛光 Brushed/Polished	37.0	C5级
BQJ-C-19	800×200	3.0	304不锈钢304 SS	拉丝/抛光 Brushed/Polished	46.8	C5级

玻璃钢电缆桥架示意图
FRP Cable Tray Diagram

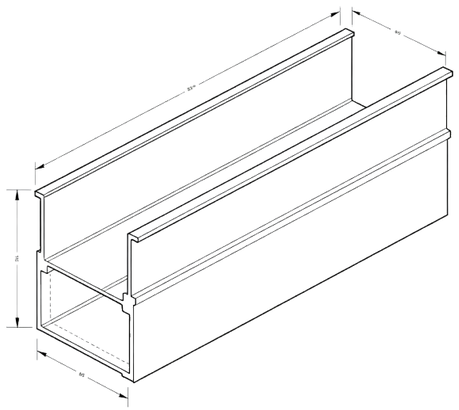

用途 Application

玻璃钢电缆桥架适用于电力、化工、冶金等行业的强腐蚀环境，特别适用于有绝缘要求的场所，如变电站、高压配电室、电气化铁路等。也适用于沿海盐雾腐蚀严重的地区

FRP (Fiber Reinforced Plastic) cable tray is suitable for strong corrosion environments in power, chemical, metallurgical and other industries, especially suitable for places with insulation requirements, such as substations, high-voltage distribution rooms, electrified railways, etc. Also suitable for coastal areas with severe salt spray corrosion.

结构 Construction

采用玻璃纤维增强塑料模压或拉挤成型，具有优异的绝缘性能和耐腐蚀性能。整体结构强度高，重量轻。添加阻燃剂后具有良好的阻燃性能，可达FV-0级。不导电，不导磁，无涡流损耗

Made of glass fiber reinforced plastic by molding or pultrusion, with excellent insulation performance and corrosion resistance. High overall structural strength and light weight. After adding flame retardant, it has good flame retardant performance, up to FV-0 grade. Non-conductive, non-magnetic, no eddy current loss.

产品特性 Product Feature

- 绝缘性能优异，绝缘电阻≥$10^{12}\Omega$
  Excellent insulation performance, insulation resistance ≥$10^{12}\Omega$
- 阻燃等级达FV-0级，阻燃性能好
  Flame retardant grade up to FV-0, good flame retardant performance
- 耐酸碱盐腐蚀，适用于强腐蚀环境
  Resistant to acid, alkali and salt corrosion, suitable for strong corrosion environments
- 重量轻，约为钢制的1/4
  Light weight, about 1/4 of steel
- 不导电不导磁，无涡流损耗
  Non-conductive and non-magnetic, no eddy current loss

规格参数表 Specification Table

产品代号 Model No.	规格 W×H (mm) Spec W×H	板厚 (mm) Thickness	材质 Material	阻燃等级 Flame Grade	重量 (kg/m)Weight	绝缘等级 Insulation Grade
FQJ-C-01	100×50	3.0	SMC玻璃钢SMC FRP	FV-0	1.2	B级
FQJ-C-02	100×100	3.0	SMC玻璃钢SMC FRP	FV-0	1.6	B级
FQJ-C-03	150×75	3.0	SMC玻璃钢SMC FRP	FV-0	1.7	B级
FQJ-C-04	150×100	3.5	SMC玻璃钢SMC FRP	FV-0	2.2	B级
FQJ-C-05	200×100	3.5	SMC玻璃钢SMC FRP	FV-0	2.6	B级
FQJ-C-06	200×150	4.0	SMC玻璃钢SMC FRP	FV-0	3.8	B级
FQJ-C-07	300×100	4.0	SMC玻璃钢SMC FRP	FV-0	3.9	B级
FQJ-C-08	300×150	4.0	SMC玻璃钢SMC FRP	FV-0	4.8	B级
FQJ-C-09	400×100	4.5	SMC玻璃钢SMC FRP	FV-0	5.5	B级
FQJ-C-10	400×150	4.5	SMC玻璃钢SMC FRP	FV-0	6.5	B级
FQJ-C-11	400×200	5.0	SMC玻璃钢SMC FRP	FV-0	7.5	B级
FQJ-C-12	500×100	5.0	SMC玻璃钢SMC FRP	FV-0	6.8	B级
FQJ-C-13	500×150	5.0	SMC玻璃钢SMC FRP	FV-0	7.8	B级
FQJ-C-14	500×200	5.5	SMC玻璃钢SMC FRP	FV-0	10.0	B级
FQJ-C-15	600×100	5.5	SMC玻璃钢SMC FRP	FV-0	8.0	B级
FQJ-C-16	600×150	5.5	SMC玻璃钢SMC FRP	FV-0	10.2	B级
FQJ-C-17	600×200	6.0	SMC玻璃钢SMC FRP	FV-0	11.5	B级
FQJ-C-18	800×150	6.0	SMC玻璃钢SMC FRP	FV-0	12.5	B级
FQJ-C-19	800×200	6.5	SMC玻璃钢SMC FRP	FV-0	15.8	B级

VOLINIX

电缆桥架配件

CABLE TRAY ACCESSORIES

产品示意图
Product Diagrams

水平弯通HORIZONTAL ELBOW	垂直上弯通VERTICAL UP ELBOW
垂直下弯通VERTICAL DOWN ELBOW	水平三通HORIZONTAL TEE
水平四通HORIZONTAL CROSS	上垂直三通UPPER VERTICAL TEE
下垂直三通LOWER VERTICAL TEE	变径REDUCER

用途 Application

弯通系列用于电缆桥架的转向、分支和变径连接，广泛应用于各种复杂的电缆敷设路径。包括水平弯通、垂直弯通、三通、四通、变径等多种类型，可满足不同的工程需求

Fittings series are used for turning, branching and reducing connections of cable trays, widely used in various complex cable laying paths. Including horizontal elbows, vertical elbows, tees, crosses, reducers and other types, can meet different engineering needs.

结构 Construction

采用与桥架主体相同的材质和表面处理，确保系统的一致性和防腐性能。弯通的弯曲半径根据电缆弯曲半径要求设计，确保电缆敷设质量。所有连接处均采用专用连接片和螺栓固定，连接牢固可靠

Made of the same material and surface treatment as the cable tray body, ensuring system consistency and anti-corrosion performance. The bending radius of the elbow is designed according to cable bending radius requirements, ensuring cable laying quality. All connections are fixed with special connection plates and bolts, firm and reliable.

产品特性 Product Feature

- 种类齐全，满足各种转向和分支需求
  Complete variety, meeting various turning and branching needs
- 与桥架主体材质一致，确保系统统一性
  Consistent with cable tray body material, ensuring system unity
- 弯曲半径符合电缆敷设要求
  Bending radius meets cable laying requirements
- 连接牢固可靠，安装方便
  Firm and reliable connection, easy installation
- 可定制特殊角度和规格
  Special angles and specifications can be customized

规格参数表 Specification Table

产品代号 Model No.	名称 Name	适用规格 (mm) Applicable Spec	角度 Angle	材质 Material	备注 Remarks
XQJ-LW-01	水平弯通 Horizontal Elbow	100~800	90°	钢/铝合金/不锈钢 Steel/Aluminum/SS	左弯/右弯 Left/Right
XQJ-LW-02	45°水平弯通45° Horizontal Elbow	100~800	45°	钢/铝合金/不锈钢 Steel/Aluminum/SS	左弯/右弯 Left/Right
XQJ-CW-01	上弯通 Vertical Up Elbow	100~800	90°	钢/铝合金/不锈钢 Steel/Aluminum/SS	向上弯曲 Upward
XQJ-CW-02	下弯通Vertical Down Elbow	100~800	90°	钢/铝合金/不锈钢 Steel/Aluminum/SS	向下弯曲 Upward
XQJ-TE-01	等径三通 Equal Tee	100~800	90°	钢/铝合金/不锈钢 Steel/Aluminum/SS	三通分支 Tee branch
XQJ-TE-02	异径三通 Reducing Tee	100~800	90°	钢/铝合金/不锈钢 Steel/Aluminum/SS	变径分支 Reducing branch
XQJ-CR-01	等径四通 Equal Cross	100~800	90°	钢/铝合金/不锈钢 Steel/Aluminum/SS	四通分支 Cross branch
XQJ-RE-01	变径Reducer	100~800	-	钢/铝合金/不锈钢 Steel/Aluminum/SS	大小头 Reducer
XQJ-RE-02	调高片 Height Adjuster	100~800	-	钢/铝合金/不锈钢 Steel/Aluminum/SS	高度调整 Height adjust
XQJ-BW-01	变宽弯通Width Changing Elbow	100~800	90°	钢/铝合金/不锈钢 Steel/Aluminum/SS	宽度变化 Width change

产品示意图
Product Diagrams

托臂 BRACKET ARM

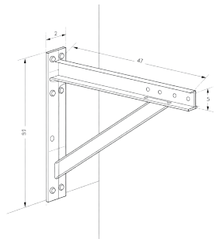

立柱 COLUMN

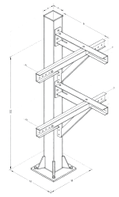

吊架 HANGER

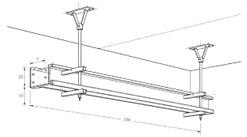

门型架 DOOR FRAME

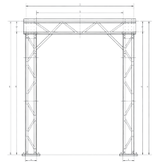

用途 Application

支吊架系列用于电缆桥架的支撑和固定，根据安装方式可分为吊顶式、壁挂式、落地式等多种形式。广泛应用于各种建筑结构的桥架安装，可根据现场情况选择合适的支吊架

Support and hanger series are used for supporting and fixing cable trays. According to installation methods, they can be divided into ceiling type, wall-mounted type, floor-standing type and other forms. Widely used in cable tray installation of various building structures, suitable supports and hangers can be selected according to site conditions.

结构 Construction

采用优质钢材制造，经过精确的力学计算，确保承载能力和安全系数。表面经热镀锌或喷塑处理，防腐性能好。结构设计合理，安装调节方便，可适应不同的安装环境和要求

Made of high-quality steel, with precise mechanical calculation, ensuring load-bearing capacity and safety factor. Surface treated with hot dip galvanizing or powder coating, good anti-corrosion performance. Reasonable structural design, convenient installation and adjustment, can adapt to different installation environments and requirements.

产品特性 Product Feature

- 种类齐全，适用于各种安装方式
  Complete variety, suitable for various installation methods
- 承载能力强，安全系数高
  Strong load-bearing capacity, high safety factor
- 表面防腐处理，使用寿命长
  Surface anti-corrosion treatment, long service life
- 安装调节方便，适应性强
  Convenient installation and adjustment, strong adaptability
- 可定制特殊规格和荷载
  Special specifications and loads can be customized

规格参数表 Specification Table

产品代号 Model No.	名称 Name	规格 (mm) Specification	材质 Material	表面处理 Surface Treatment	荷载 (kg)Load
XQJ-TB-01	托臂 Bracket Arm	200~800	Q235钢 Q235 Steel	热镀锌/喷塑 HDG/Powder	100~500
XQJ-TB-02	重型托臂 Heavy Bracket	300~800	Q235钢 Q235 Steel	热镀锌/喷塑 HDG/Powder	500~1000
XQJ-LZ-01	立柱 Column	1000~3000	Q235钢 Q235 Steel	热镀锌/喷塑 HDG/Powder	500~2000
XQJ-LZ-02	重型立柱 Heavy Column	1000~3000	Q235钢 Q235 Steel	热镀锌/喷塑 HDG/Powder	2000~5000
XQJ-DJ-01	吊架 Hanger	300~1500	Q235钢 Q235 Steel	热镀锌/喷塑 HDG/Powder	100~500
XQJ-DJ-02	吊杆 Hanger Rod	M10/M12/M16	Q235钢 Q235 Steel	热镀锌/喷塑 HDG/Powder	200~800
XQJ-DZ-01	底座Base	100×100	Q235钢 Q235 Steel	热镀锌/喷塑 HDG/Powder	1000
XQJ-ZJ-01	支架Support	200~800	Q235钢 Q235 Steel	热镀锌/喷塑 HDG/Powder	200~1000
XQJ-MJ-01	门型架 Door Frame	500~2000	Q235钢 Q235 Steel	热镀锌/喷塑 HDG/Powder	500~1500
XQJ-KZJ-01	抗震支架 Seismic Bracket	按定制Custom	Q235钢 Q235 Steel	热镀锌/喷塑 HDG/Powder	按设计 As designed

产品示意图
Product Diagrams

分隔板DIVIDER	螺栓配件BOLT ACCESSORIES
用于桥架内部分隔强弱电 / For separating strong and weak current inside tray	连接片、螺栓、螺母、接地线等 / Connector plates, bolts, nuts, grounding wires, etc.

用途 Application

连接附件用于电缆桥架的连接、固定、接地、防护等，是电缆桥架系统不可或缺的组成部分。包括连接片、螺栓、螺母、接地线、分隔板、盖板等，确保桥架系统的完整性和可靠性

Connection accessories are used for connection, fixing, grounding, protection of cable trays, and are indispensable components of the cable tray system. Including connector plates, bolts, nuts, grounding wires, dividers, covers, etc., ensuring the integrity and reliability of the cable tray system.

结构 Construction

所有附件均采用标准件，与桥架主体配套使用。材质和表面处理与桥架主体保持一致，确保系统的防腐性能和外观统一性。规格齐全，可满足各种安装需求

All accessories use standard parts, used with the cable tray body. Material and surface treatment are consistent with the cable tray body, ensuring system anti-corrosion performance and appearance unity. Complete specifications can meet various installation needs.

产品特性 Product Feature

- 规格齐全，配套性好
  Complete specifications, good compatibility
- 标准件设计，互换性强
  Standard part design, strong interchangeability
- 材质与桥架一致，确保系统统一性
  Material consistent with cable tray, ensuring system unity
- 安装方便，连接可靠
  Convenient installation, reliable connection
- 质量稳定，性价比高
  Stable quality, high cost-effectiveness

规格参数表 Specification Table

产品代号 Model No.	名称 Name	规格 (mm) Specification	材质 Material	表面处理 Surface Treatment	适用桥架宽度 Tray Width	备注 Remarks
CN-01	连接片 Connector Plate	100×50×3mm	冷轧钢板 Cold Rolled Steel	镀锌/喷塑 Galvanized/Powder	100~200mm	配套螺栓 Bolts included
CN-02	连接片 Connector Plate	200×50×3mm	冷轧钢板 Cold Rolled Steel	镀锌/喷塑 Galvanized/Powder	200~400mm	配套螺栓 Bolts included
CN-03	连接片 Connector Plate	300×50×3mm	冷轧钢板 Cold Rolled Steel	镀锌/喷塑 Galvanized/Powder	400~600mm	配套螺栓 Bolts included
CN-04	连接片 Connector Plate	400×50×3mm	冷轧钢板 Cold Rolled Steel	镀锌/喷塑 Galvanized/Powder	600~800mm	配套螺栓 Bolts included
CV-01	盖板 Cover Plate	100×0.8mm	冷轧钢板 Cold Rolled Steel	镀锌/喷塑 Galvanized/Powder	100mm	卡扣式 Snap-on
CV-02	盖板 Cover Plate	200×0.8mm	冷轧钢板 Cold Rolled Steel	镀锌/喷塑 Galvanized/Powder	200mm	卡扣式 Snap-on
CV-03	盖板 Cover Plate	300×0.8mm	冷轧钢板 Cold Rolled Steel	镀锌/喷塑 Galvanized/Powder	300mm	卡扣式 Snap-on
CV-04	盖板 Cover Plate	400×0.8mm	冷轧钢板 Cold Rolled Steel	镀锌/喷塑 Galvanized/Powder	400mm	卡扣式 Snap-on
CD-01	分隔板 Divider	100×H×0.8mm	冷轧钢板 Cold Rolled Steel	镀锌/喷塑 Galvanized/Powder	100~800mm	高度定制 Custom height
BG-01	螺栓螺母及接地线 Bolts,Nuts,Grounding	M8×20mm	不锈钢 Stainless Steel	镀锌Galvanized	通用 Universal	含跨接线 Including jumper

VOLINIX

母线槽产品系列

BUSBAR TRUNKING SYSTEM SERIES

章节概述 CHAPTER OVERVIEW:

母线槽是一种高效、安全的电力输送系统，广泛应用于工厂、矿山、高层建筑、商业中心等场所的供配电系统。具有载流量大、压降小、安全可靠、安装方便等优点，是大电流电力输送的理想选择

Busbar trunking system is an efficient and safe power transmission system, widely used in power supply and distribution systems in factories, mines, high-rise buildings, commercial centers and other places. With large current carrying capacity, small voltage drop, safe and reliable, easy installation and other advantages, it is the ideal choice for high current power transmission.

母线槽系统全场景示意图

BUSWAY SYSTEM APPLICATION SCENARIOS

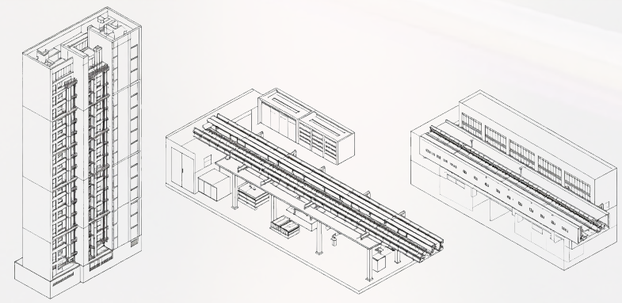

高层建筑/High-rise buildings　工厂车间/Workshop of plant　医院/Hospital

密集型母线槽示意图
Dense Type Busbar Trunking System Diagram

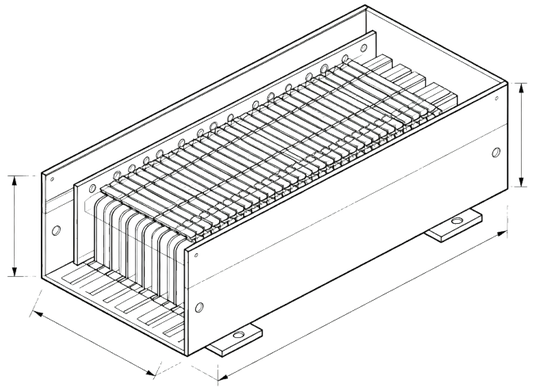

用途 Application

密集型母线槽适用于交流三相四线、三相五线制，频率50~60Hz，额定电压至690V，额定工作电流250~6300A的供配电系统。广泛应用于工厂、矿山、高层建筑、商业中心等场所的电力输送

Dense type busbar trunking system is suitable for AC three-phase four-wire, three-phase five-wire system, frequency 50~60Hz, rated voltage up to 690V, rated working current 250~6300A power supply and distribution system. Widely used in power transmission in factories, mines, high-rise buildings, commercial centers and other places.

结构 Construction

采用优质铜排作为导体，导体表面包覆绝缘材料，紧密叠压在金属外壳内。整体结构紧凑，体积小，载流量大。外壳采用钢板或铝合金板制成，具有良好的机械强度和防护性能

Uses high-quality copper bars as conductors, conductor surface coated with insulating material, tightly stacked in the metal shell. Overall compact structure, small volume, large current carrying capacity. Shell is made of steel plate or aluminum alloy plate, with good mechanical strength and protection performance.

产品特性 Product Feature

- 结构紧凑，体积小，载流量大
  Compact structure, small volume, large current carrying capacity
- 绝缘性能好，安全可靠
  Good insulation performance, safe and reliable
- 压降小，能耗低
  Small voltage drop, low energy consumption
- 安装方便，施工周期短
  Easy installation, short construction period
- 防护等级高，使用寿命长
  High protection level, long service life

规格参数表 Specification Table

产品代号 Model	额定电流 (A) Rated Current	导体规格 (mm) Conductor Size	外壳尺寸 W×H (mm)Shell Size	防护等级 IP Grade	温升 (K) Temp Rise
CMC-250	250	4×40	100×50	IP54	≤70
CMC-400	400	4×60	120×60	IP54	≤70
CMC-630	630	6×60	140×70	IP54	≤70
CMC-800	800	6×80	160×80	IP54	≤70
CMC-1000	1000	8×80	180×90	IP54	≤70
CMC-1250	1250	10×80	200×100	IP54	≤70
CMC-1600	1600	10×100	220×110	IP54	≤70
CMC-2000	2000	10×125	250×130	IP54	≤70
CMC-2500	2500	12×125	280×150	IP54	≤70
CMC-3150	3150	12×160	320×170	IP54	≤70

空气型母线槽示意图
Air Type Busbar Trunking System Diagram

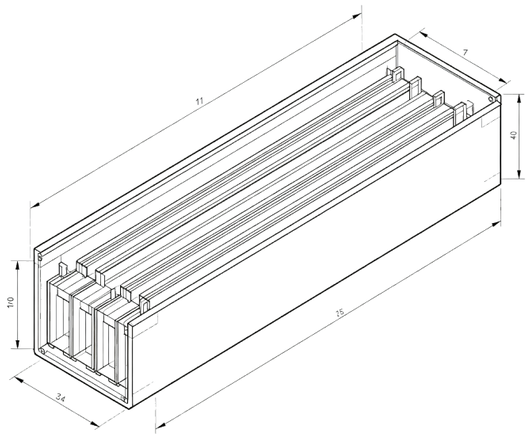

用途 Application

空气型母线槽适用于交流三相四线、三相五线制，频率50~60Hz，额定电压至690V，额定工作电流250~4000A的供配电系统。特别适用于大跨度、高电压等级的电力输送场合

Air type busbar trunking system is suitable for AC three-phase four-wire, three-phase five-wire system, frequency 50~60Hz, rated voltage up to 690V, rated working current 250~4000A power supply and distribution system. Especially suitable for large span, high voltage level power transmission occasions.

结构 Construction

采用优质铜排作为导体，导体之间以空气作为绝缘介质，相间保持一定的空气间隙。导体通过绝缘支撑件固定在金属外壳内。结构简单，散热性能好，安装维护方便

Uses high-quality copper bars as conductors, air is used as insulating medium between conductors, maintaining a certain air gap between phases. Conductors are fixed in the metal shell through insulating supports. Simple structure, good heat dissipation performance, easy installation and maintenance.

产品特性 Product Feature

- 空气绝缘，散热性能好
  Air insulation, good heat dissipation performance
- 结构简单，维护方便
  Simple structure, easy maintenance
- 适用于大跨度敷设
  Suitable for large span laying
- 绝缘可靠，安全性能好
  Reliable insulation, good safety performance
- 造价经济，性价比高
  Economical cost, high cost-effectiveness

规格参数表 Specification Table

产品代号 Model	额定电流 (A) Rated Current	导体规格 (mm) Conductor Size	外壳尺寸 W×H (mm)Shell Size	防护等级 IP Grade	温升 (K) Temp Rise
CMC-A-250	250	4×40	150×80	IP40	≤70
CMC-A-400	400	4×60	180×100	IP40	≤70
CMC-A-630	630	6×60	200×120	IP40	≤70
CMC-A-800	800	6×80	220×140	IP40	≤70
CMC-A-1000	1000	8×80	250×160	IP40	≤70
CMC-A-1250	1250	10×80	280×180	IP40	≤70
CMC-A-1600	1600	10×100	300×200	IP40	≤70
CMC-A-2000	2000	10×125	350×220	IP40	≤70
CMC-A-2500	2500	12×125	380×250	IP40	≤70
CMC-A-3150	3150	12×160	420×280	IP40	≤70

母线槽插接箱示意图
Busbar Plug-in Box Diagram

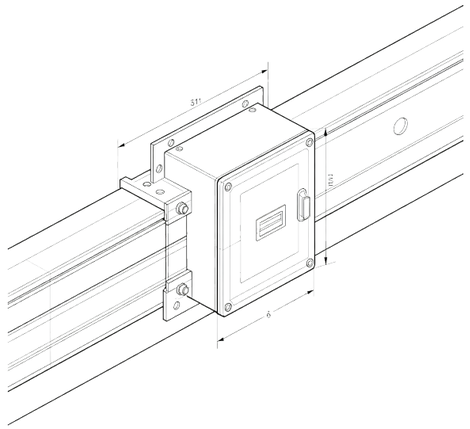

用途 Application

母线槽插接箱是母线槽系统的分接单元，用于从母线槽主干线引出分支电源。广泛应用于工厂生产线、商业建筑、数据中心等需要灵活配电的场所，可随时增加或减少用电点

Busbar plug-in box is the tapping unit of the busbar system, used to draw branch power from the busbar main line. Widely used in factory production lines, commercial buildings, data centers and other places requiring flexible power distribution. Power points can be added or removed at any time.

结构 Construction

插接箱由外壳、插脚、断路器、操作机构等组成。插脚与母线槽导体紧密接触，确保可靠导电。内置断路器或熔断器，提供过载和短路保护。外壳采用钢板或铝合金板制造，表面经防腐处理

Plug-in box consists of shell, plug pins, circuit breaker, operating mechanism, etc. Plug pins are in close contact with busbar conductors to ensure reliable conductivity. Built-in circuit breaker or fuse provides overload and short circuit protection. Shell is made of steel plate or aluminum alloy plate with anti-corrosion treatment.

产品特性 Product Feature

- 插接方便，可带电插拔
  Convenient plug-in, can be plugged/unplugged live
- 内置断路器，保护功能完善
  Built-in circuit breaker, complete protection functions
- 分接灵活，可随时增减用电点
  Flexible tapping, can add/remove power points anytime
- 接触可靠，压降小
  Reliable contact, small voltage drop
- 安装维护方便
  Easy installation and maintenance

规格参数表 Specification Table

产品代号 Model	额定电流 (A) Rated Current	极数 Poles	防护等级 IP Grade	断路器规格 Breaker	外形尺寸(mm) Dimensions	重量 (kg)Weight	备注 Remarks
PB-250	250	3P/4P	IP54	160~250A	300×200×150	8.5	插拔式 Plug-in
PB-400	400	3P/4P	IP54	250~400A	350×250×180	12.0	插拔式 Plug-in
PB-630	630	3P/4P	IP54	400~630A	400×300×200	16.5	插拔式 Plug-in
PB-800	800	3P/4P	IP54	630~800A	450×350×220	22.0	插拔式 Plug-in
PB-1000	1000	3P/4P	IP54	800~1000A	500×400×250	28.5	插拔式 Plug-in
PB-1250	1250	3P/4P	IP54	1000~1250A	550×450×280	35.0	插拔式 Plug-in
PB-1600	1600	3P/4P	IP54	1250~1600A	600×500×300	42.0	插拔式 Plug-in
PB-2000	2000	3P/4P	IP54	1600~2000A	650×550×320	50.0	插拔式 Plug-in
PB-2500	2500	3P/4P	IP54	2000~2500A	700×600×350	58.0	插拔式 Plug-in
PB-3150	3150	3P/4P	IP54	2500~3150A	750×650×380	68.0	插拔式 Plug-in

VOLINIX

抗震支架

SEISMIC BRACKET

章节概述 CHAPTER OVERVIEW：

抗震支架用于建筑机电工程中，对电缆桥架、水管、风管等机电设施进行抗震加固。当地震发生时，可有效减少地震对机电设施的破坏，保护人民生命财产安全。广泛应用于高层建筑、医院、学校、商场、地铁等场所

Seismic brackets are used in building mechanical and electrical engineering to seismically reinforce mechanical and electrical facilities such as cable trays, water pipes, and air ducts. When an earthquake occurs, it can effectively reduce earthquake damage to mechanical and electrical facilities, protecting people's lives and property. Widely used in high-rise buildings, hospitals, schools, shopping malls, subways and other places.

抗震支架系统全场景示意图

SEISMIC BRACKET SYSTEM APPLICATION SCENARIOS

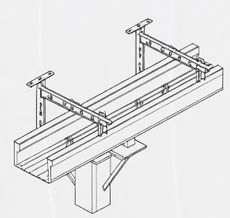

电缆桥架/Cable Tray

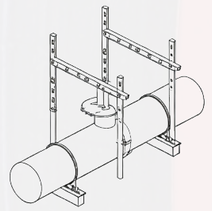

给排水管/Weter Pipe

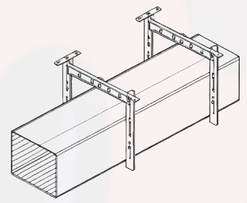

通风水管/Air Duct

侧向抗震支架示意图
Lateral Seismic Bracket Diagram

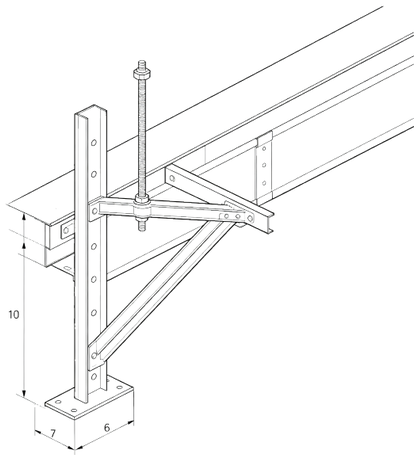

用途 Application

侧向抗震支架用于抵抗水平方向的地震作用，主要承受侧向地震力。适用于电缆桥架、水管、风管等机电设施的侧向抗震加固，可有效减少地震对管道和桥架的横向破坏

Lateral seismic bracket is used to resist horizontal earthquake action, mainly bearing lateral seismic force. Suitable for lateral seismic reinforcement of mechanical and electrical facilities such as cable trays, water pipes, and air ducts, can effectively reduce lateral damage to pipes and trays caused by earthquakes.

结构 Construction

侧向抗震支架由竖向吊杆、侧向斜撑、抗震连接件、底座等组成。竖向吊杆用于承受竖向荷载，侧向斜撑用于抵抗水平地震力。所有构件均采用优质钢材制造，表面经热镀锌处理，防腐性能优异

Lateral seismic bracket consists of vertical hanger rod, lateral diagonal brace, seismic connector, base, etc. Vertical hanger rod is used to bear vertical load, lateral diagonal brace is used to resist horizontal seismic force. All components are made of high-quality steel with hot dip galvanized surface treatment, excellent anti-corrosion performance.

产品特性 Product Feature

- 有效抵抗侧向地震作用，保护机电设施安全
  Effectively resist lateral seismic action, protect mechanical and electrical facilities safety
- 结构设计合理，安全系数高
  Reasonable structural design, high safety factor
- 电镀锌表面处理，防腐性能好
  Hot dip galvanized surface treatment, good anti-corrosion performance
- 安装调节方便，适应性强
  Convenient installation and adjustment, strong adaptability
- 符合相关抗震设计规范要求
  Compliant with relevant seismic design specifications

规格参数表 Specification Table

产品代号 Model	适用桥架宽度 (mm) Applicable Tray Width	吊杆规格 Hanger Rod	斜撑规格 Diagonal Brace	最大间距 (m) Max Spacing	抗震等级 Seismic Grade
KZ-C-100	≤100	M8	C型钢 41×72C -Channel 41×21	12	8度Grade 8
KZ-C-200	100~200	M10	C型钢 41×72C -Channel 41×21	12	8度Grade 8
KZ-C-300	200~300	M10	C型钢 41×72C -Channel 41×41	9	8度Grade 8
KZ-C-400	300~400	M12	C型钢 41×72C -Channel 41×41	9	8度Grade 8
KZ-C-500	400~500	M12	C型钢 41×72C -Channel 41×52	6	8度Grade 8
KZ-C-600	500~600	M14	C型钢 41×72C -Channel 41×52	6	8度Grade 8
KZ-C-800	600~800	M16	C型钢 41×72C -Channel 41×72	6	8度Grade 8
KZ-C-1000	800~1000	M16	C型钢 41×72C -Channel 41×72	4.5	8度Grade 8

纵向抗震支架示意图
Longitudinal Seismic Bracket Diagram

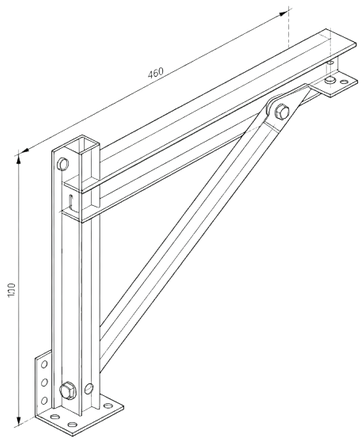

用途 Application

纵向抗震支架用于抵抗纵向（沿管线方向）的地震作用，主要承受纵向地震力。适用于电缆桥架、水管、风管等机电设施的纵向抗震加固，可有效减少地震对管道和桥架的纵向破坏

Longitudinal seismic bracket is used to resist longitudinal (along pipeline direction) earthquake action, mainly bearing longitudinal seismic force. Suitable for longitudinal seismic reinforcement of mechanical and electrical facilities such as cable trays, water pipes, and air ducts, can effectively reduce longitudinal damage to pipes and trays caused by earthquakes.

结构 Construction

纵向抗震支架由竖向吊杆、纵向斜撑、抗震连接件、底座等组成。竖向吊杆用于承受竖向荷载，纵向斜撑用于抵抗纵向地震力。所有构件均采用优质钢材制造，表面经热镀锌处理，防腐性能优异

Longitudinal seismic bracket consists of vertical hanger rod, longitudinal diagonal brace, seismic connector, base, etc. Vertical hanger rod is used to bear vertical load, longitudinal diagonal brace is used to resist longitudinal seismic force. All components are made of high-quality steel with hot dip galvanized surface treatment, excellent anti-corrosion performance.

产品特性 Product Feature

- 有效抵抗纵向地震作用，保护机电设施安全
  Effectively resist longitudinal seismic action, protect mechanical and electrical facilities safety
- 结构设计合理，安全系数高
  Reasonable structural design, high safety factor
- 电镀锌表面处理，防腐性能好
  Hot dip galvanized surface treatment, good anti-corrosion performance
- 安装调节方便，适应性强
  Convenient installation and adjustment, strong adaptability
- 符合相关抗震设计规范要求
  Compliant with relevant seismic design specifications

规格参数表 Specification Table

产品代号 Model	适用桥架宽度 (mm) Applicable Tray Width	吊杆规格 Hanger Rod	斜撑规格 Diagonal Brace	最大间距 (m) Max Spacing	抗震等级 Seismic Grade
KZ-Z-100	≤100	M8	C型钢 41×72C -Channel 41×21	24	8度Grade 8
KZ-Z-200	100~200	M10	C型钢 41×72C -Channel 41×21	24	8度Grade 8
KZ-Z-300	200~300	M10	C型钢 41×72C -Channel 41×41	18	8度Grade 8
KZ-Z-400	300~400	M12	C型钢 41×72C -Channel 41×41	18	8度Grade 8
KZ-Z-500	400~500	M12	C型钢 41×72C -Channel 41×52	12	8度Grade 8
KZ-Z-600	500~600	M14	C型钢 41×72C -Channel 41×52	12	8度Grade 8
KZ-Z-800	600~800	M16	C型钢 41×72C -Channel 41×72	12	8度Grade 8
KZ-Z-1000	800~1000	M16	C型钢 41×72C -Channel 41×72	9	8度Grade 8

VOLINIX

附录

APPENDIX

电缆敷设方式示意图
Figure Appendix-A Cable Installation Methods

2X2影响载设方式

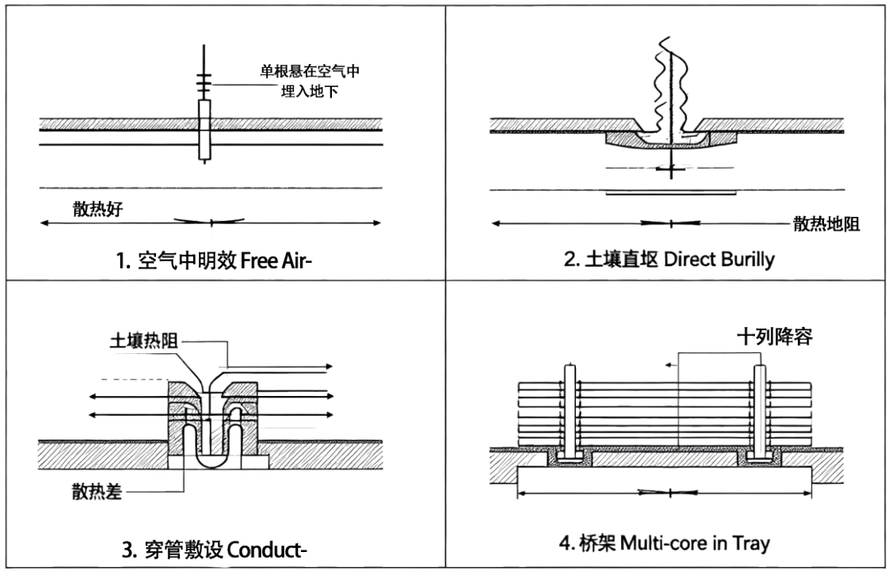

影响因素：

环境温度	土壤热阻	子列根数	敷设深度
Ambient Temp	Soil thermal resistance	Number of Cables	Installation depth

本表列出铜芯聚氯乙烯绝缘电缆在不同敷设方式和环境温度下的参考载流量，实际应用时应根据具体工况进行修正

This table lists the reference current carrying capacity of copper core PVC insulated cables under different installation methods and ambient temperatures

表A-1 0.6/1kV铜芯电力电缆空气中敷设载流量（A）

Table A-1 Current Carrying Capacity of 0.6/1kV Copper Power Cables in Air (A)

导体截面 Conductor (mm^2)	单芯 Single Core	两芯 Two Core	三芯 Three Core	四芯 Four Core	五芯 Five Core
1.5	25	20	17	16	15
2.5	34	27	24	22	21
4	43	35	31	29	27
6	54	44	39	37	35
10	72	59	52	49	47
16	95	77	69	65	62
25	120	98	87	83	79
35	145	118	105	100	96
50	175	142	127	121	116
70	215	174	157	149	143
95	255	207	186	177	170
120	290	236	212	201	194
150	330	269	242	230	221
185	370	301	271	258	248
240	430	350	315	300	288
300	490	398	358	341	327
400	575	-	415	-	-
500	660	-	475	-	-
630	770	-	540	-	-

注：环境温度30℃，导体最高工作温度70℃
Note: Ambient temperature 30℃, maximum conductor temperature 70℃

表A-2 0.6/1kV铜芯电力电缆土壤中直埋载流量（A）

Table A-2 Current Carrying Capacity of 0.6/1kV Copper Power Cables Buried in Soil (A)

导体截面 Conductor (mm^2)	单芯 Single Core	两芯 Two Core	三芯 Three Core	四芯 Four Core
1.5	33	20	23	22
2.5	44	36	31	29
4	55	45	39	37
6	67	55	48	45
10	88	72	63	60
16	115	94	83	79
25	142	116	102	97
35	168	137	121	115
50	198	162	143	136
70	238	194	172	164
95	278	227	201	191
120	312	254	225	214
150	348	284	252	240
185	387	315	279	266
240	445	362	321	306
300	500	407	361	344
400	580	-	415	-
500	660	-	470	-

注：土壤温度25℃，土壤热阻系数1.2K·m/W，埋深0.7m
Note: Soil temperature 25℃, soil thermal resistivity 1.2K·m/W, burial depth 0.7m

电缆电压降计算原理示意图
Figure Appendix-B Voltage Drop Calculation Principle

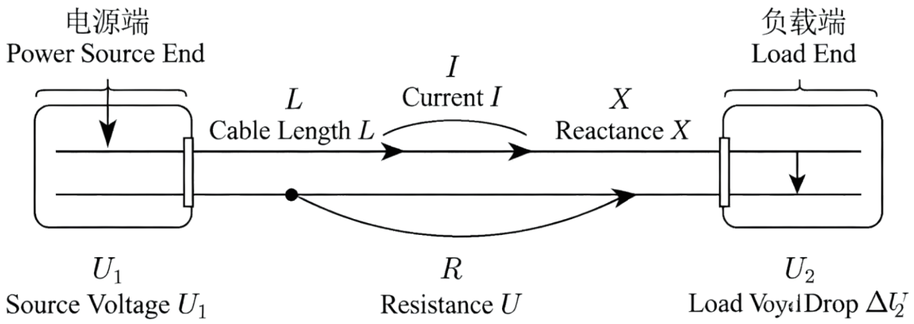

$$\Delta U = \frac{\sqrt{3} \times I \times L \times (R \times \cos\phi + X \times \sin\phi / 1000}$$

电压降计算公式：

ΔU = (√3 × I × L × (R×cosϕ + X×sinϕ)) / 1000

Voltage drop formula:

ΔU = (√3 × I × L × (R×cosϕ + X×sinϕ)) / 1000

式中：I-负荷电流(A)，L-电缆长度(m)，R-导体电阻(Ω/km)，X-导体电抗(Ω/km)，cosϕ-功率因数

Where: I-Load current (A), L-Cable length (m), R-Conductor resistance (Ω/km), X-Conductor reactance (Ω/km), cosϕ-Power factor

表B-1 三相380V铜芯电缆电压降参考值（%/A·km，cosϕ=0.8）

Table B-1 Voltage Drop Reference for 3-Phase 380V Copper Cables (%/A·km, cosϕ=0.8)

导体截面 Conductor (mm²)	电阻R Resistance (Ω/km)	电抗X Reactance (Ω/km)	电压降 Voltage Drop (%/A·km)
1.5	12.10	0.080	1.820
2.5	7.41	0.078	1.120
4	4.61	0.076	0.700
6	3.08	0.074	0.470
10	1.83	0.072	0.280
16	1.15	0.070	0.180
25	0.74	0.069	0.117
35	0.53	0.068	0.085
50	0.39	0.067	0.063
70	0.28	0.066	0.046
95	0.21	0.065	0.035
120	0.16	0.064	0.028
150	0.13	0.063	0.023
185	0.10	0.062	0.019
240	0.08	0.061	0.015
300	0.06	0.060	0.013
400	0.05	0.059	0.010

注：电压降 = 表中值 × 负荷电流(A) × 电缆长度(km)。一般要求线路电压降不超过5%。
Note: Voltage drop = table value × load current (A) × cable length (km). Generally, line voltage drop should not exceed 5%

电缆截面选择流程示意图
Figure Appendix-C Cable Cross-Section Selection Flow

本表列出铜芯聚氯乙烯绝缘电缆在不同敷设方式和环境温度下的参考载流量，实际应用时应根据具体工况进行修正

Cable cross-section selection should comprehensively consider current carrying capacity, voltage drop, short-circuit thermal stability, mechanical strength and other factors.

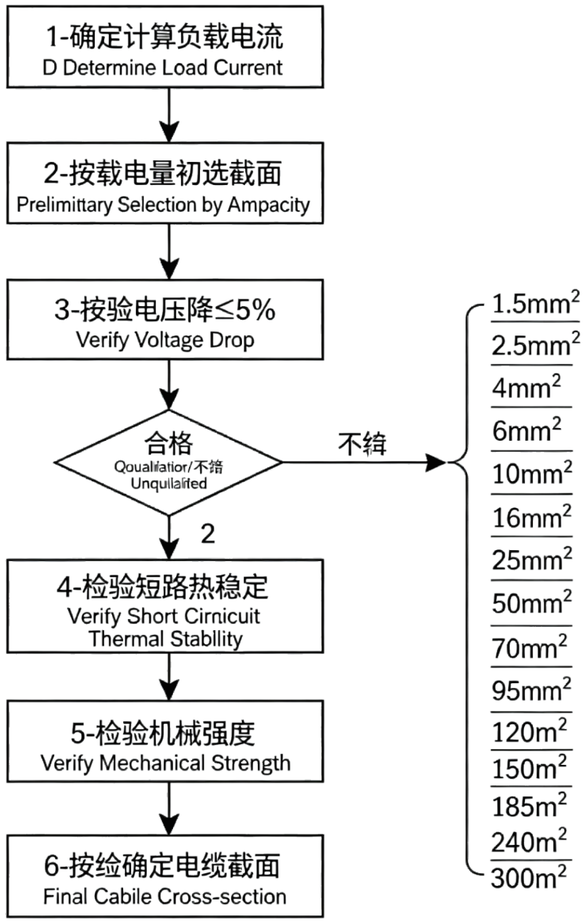

表C-1 三相380V电动机负荷电缆截面选择参考

Table C-1 Cable Cross-Section Selection Reference for 3-Phase 380V Motor Loads

电动机功率 Motor Power (kW)	额定电流 Rated Current (A)	建议截面 Recommended (mm²)	空气敷设 In Air	穿管敷设 In Conduit
1.5	3.7	1.5	1.5	2.5
2.2	5.0	1.5	1.5	2.5
3	6.8	2.5	2.5	37
4	8.8	2.5	2.5	4
5.5	11.6	4	4	4
7.5	15.4	4	4	6
11	22.6	6	6	6
15	30.3	6	10	10
18.5	35.9	10	10	16
22	42.5	10	16	16
30	56.8	16	16	25
37	69.8	25	25	35
45	84.2	25	35	35
55	101	35	35	50
75	136	50	70	70
90	162	70	70	95
110	196	95	95	120
132	232	120	120	150
160	277	150	150	185
200	343	185	185	240

选择原则：1. 按计算电流选择，留1.25倍余量；2. 校验电压降不超过5%；3. 校验短路热稳定；4. 考虑敷设方式和环境温度修正。
Selection principles: 1. Select by calculated current with 1.25x margin; 2. Verify voltage drop ≤5%; 3. Verify short-circuit thermal stability; 4. Consider installation method and ambient temperature correction.

电缆弯曲半径示意图
Cable Bending Radius

电缆敷设和安装时，弯曲半径不应小于下表规定值，以避免损伤电缆绝缘和导体

During cable installation, the bending radius should not be less than the values specified in the table below to avoid damaging cable insulation and conductors.

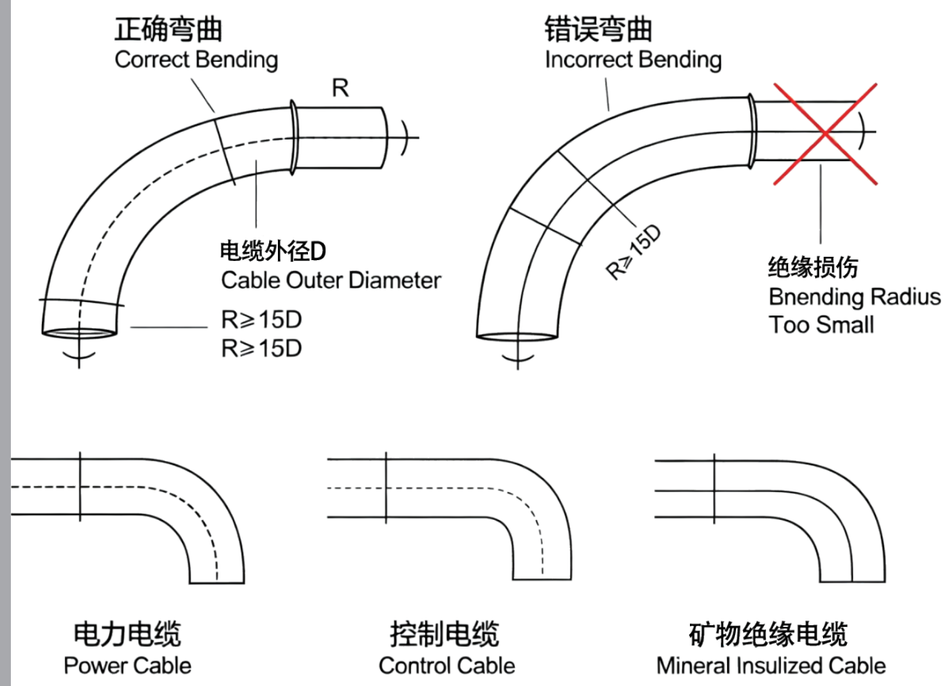

表D-1 各类电缆最小弯曲半径

Table D-1 Minimum Bending Radius for Various Cables

电缆类型 Cable Type	安装时 During Installation	固定敷设 Fixed Installation	多芯 Multi-Core	单芯 Single Core
聚氯乙烯绝缘电力电缆 PVC Insulated Power Cable	15D	12D	10D	15D
交联聚乙烯绝缘电力电缆 XLPE Insulated Power Cable	20D	15D	15D	20D
橡皮绝缘电力电缆 Rubber Insulated Power Cable	10D	8D	8D	10D
控制电缆 Control Cable	10D	8D	10D	-
矿物绝缘电缆 Mineral Insulated Cable	6D	6D	6D	6D
通信数据电缆 Communication & Data Cable	10D	8D	10D	-
光纤光缆 Fiber Optic Cable	20D	15D	-	-
架空裸导体 Overhead Bare Conductor	20D	-	-	20D
新能源电缆 New Energy Cable	10D	8D	8D	10D

注：D为电缆外径（mm）。电缆穿管时，管内径不应小于电缆外径的1.5倍。

Note: D is cable outer diameter (mm). When cable passes through conduit, conduit inner diameter should not be less than 1.5 times cable outer diameter.

电缆敷设方式综合示意图
Cable Installation Methods Overview

电缆敷设方式应根据工程条件、环境特点、电缆类型和数量等因素选择，以下为常用敷设方式的对比说明

Cable installation method should be selected based on engineering conditions, environmental characteristics, cable type and quantity.

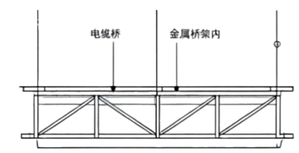

1.桥架输设
Cable Tray Installation

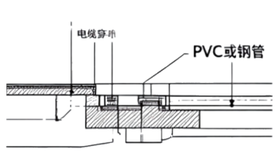

2.穿管输设
Conduic Installation

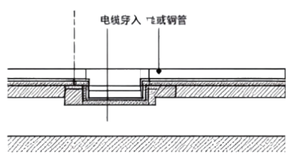

3.直埋输设
Direct Burily

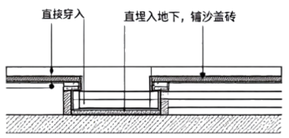

4.电缆沟输设
Cable Trench

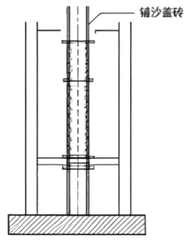

5.竖井输设
Vertical Shaft

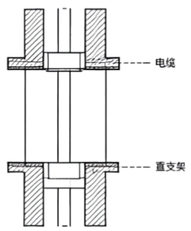

6.架空输设
Aerial Installation

选型要点： 根据环境选择、散热考虑、维护方便、防护等级

SELECTION CRITERIA: Based on environmental considerations, heat dissipation considerations, ease of maintenance, and protection level

表F-1 常用电缆敷设方式对比

Table F-1 Comparison of Common Cable Installation Methods

敷设方式 Method	适用场景 Application	优点 Advantages	缺点 Disadvantages	载流量修正系数 Correction Factor
空气中敷设 In Air	室内桥架、线槽、支架 Indoor tray, duct, bracket	散热好、安装方便、维护简单 Good heat dissipation, easy installation	受环境温度影响大 Affected by ambient temperature	1.0
穿管敷设 In Conduit	室内外穿管、暗敷 Indoor/outdoor conduit, concealed	保护性能好、美观 Good protection, aesthetic	散热差、载流量低 Poor heat dissipation, low capacity	0.8~0.9
直埋敷设 Direct Buried	室外地下、道路穿越 Outdoor underground, road crossing	占地少、散热较好 Less space, good heat dissipation	维护困难、易受机械损伤 Difficult maintenance	0.9~1.0
电缆沟敷设 In Cable Trench	厂区、变电站内 Plant area, substation	投资省、维护方便 Low investment, easy maintenance	占地较多、易积水 More space, prone to water	0.95
电缆隧道敷设 In Tunnel	大型变电站、城市主干道 Large substations, urban roads	容量大、维护方便、安全 Large capacity, safe, easy maintenance	投资大、通风要求高 High investment, high ventilation	0.9~0.95
桥架敷设 On Cable Tray	厂房、写字楼、数据中心 Factory, office, data center	安装灵活、扩容方便、美观 Flexible, easy expansion, neat	需配套支吊架、成本较高 Requires brackets, higher cost	0.95~1.0

敷设注意事项：
Installation Notes:

1. 电缆敷设时环境温度不应低于0℃，低于0℃时应采取加热措施。
1. Ambient temperature during cable installation should not be below 0°C; heating measures should be taken when below 0°C.

2. 电缆敷设时应避免扭曲、打结，不应过度拉伸。
2. Cable should avoid twisting, knotting, and excessive stretching during installation.

3. 多根电缆并列敷设时，应保持适当间距，确保散热。
3. When multiple cables are laid in parallel, proper spacing should be maintained to ensure heat dissipation.

4. 电缆穿越墙体、楼板时应加装保护管，管口做密封处理。
4. When cables pass through walls or floors, protective conduits should be installed, and pipe openings should be sealed.

电缆终端与接头制作示意图
Cable Termination and Joint Making

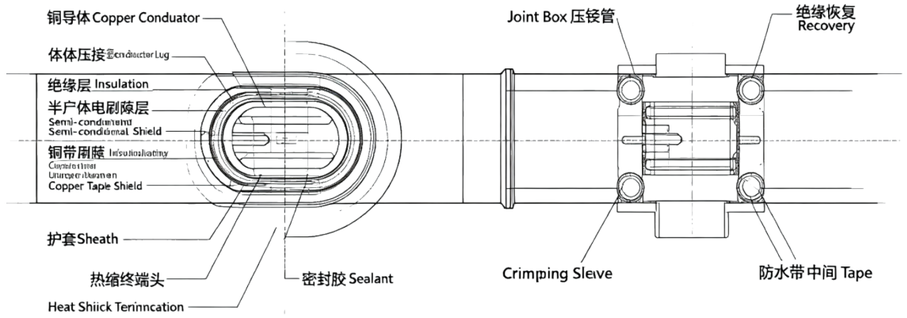

制作要点：剥切尺寸准确、压接牢固、密封防潮、绝缘恢复

Key points of production: Accurate cutting dimensions, secure crimping, moisture-proof sealing, insulation restoration

G.1 敷设前检查
G.1 Pre-installation Inspection

1. 检查电缆型号、规格、长度是否符合设计要求。

1. Check whether cable model, specification, and length meet design requirements.

2. 检查电缆外观是否完好，有无机械损伤、扭曲、受潮等现象。

2. Check cable appearance for integrity, mechanical damage, twisting, moisture, etc.

3. 用兆欧表测量电缆绝缘电阻，应符合规范要求。

3. Measure cable insulation resistance with megohmmeter, should meet specification requirements

G.2 终端与接头制作
G.2 Termination and Joint Making

1. 电缆终端和接头应由经过培训的专业人员制作。

1. Cable terminations and joints should be made by trained professionals.

2. 制作过程中应保持清洁，防止灰尘、水分进入。

2. Keep clean during making process to prevent dust and moisture from entering.

3. 剥切电缆时不应损伤导体和绝缘层。

3. Do not damage conductors and insulation when stripping cable.

4. 压接端子时应选用合适的压接模具，确保接触良好。

4. Use appropriate crimping dies when crimping terminals to ensure good contact.

G.3 接地与标识
G.3 Grounding and Labeling

1. 电缆金属护套、屏蔽层应可靠接地，接地电阻符合要求。

1. Cable metal sheath and shielding layer should be reliably grounded, grounding resistance meets requirements.

2. 电缆两端应挂标识牌，注明编号、型号、规格、起点、终点。

2. Identification tags should be hung at both ends of cable, indicating number, model, specification, start point, end point.

3. 电缆转弯处、分支处应增设标识牌。

3. Additional identification tags should be added at cable turns and branches.

G.4 试验与验收
G.4 Testing and Acceptance

1. 电缆敷设完成后应进行绝缘电阻测试和耐压试验。

1. After cable installation, insulation resistance test and withstand voltage test should be performed.

2. 试验合格后方可投入运行。

2. Cable can be put into operation only after passing tests.

3. 验收时应提交电缆出厂合格证、试验报告、安装记录等资料。

3. During acceptance, cable factory certificate, test report, installation record and other documents should be submitted.

电缆储存与运输示意图
Cable Storage and Transportation

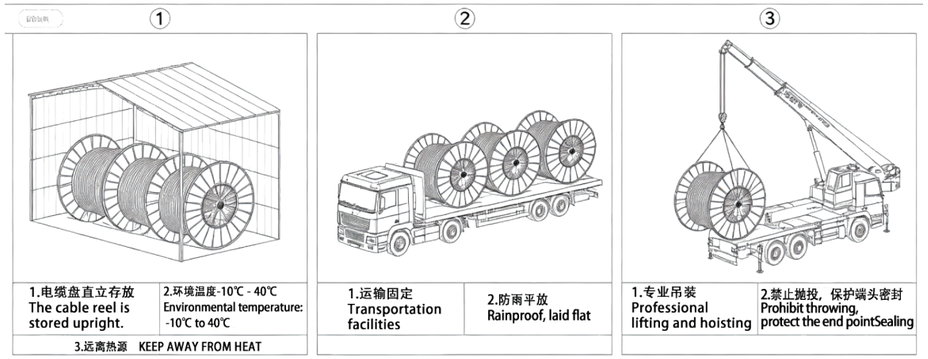

J.1 储存要求
J.1 Storage Requirements

1. 电缆应储存在干燥、通风、避雨的库房内，环境温度-10℃~+40℃。

1. Cables should be stored in dry, ventilated, rain-proof warehouse, ambient temperature -10℃~+40℃.

2. 电缆盘应直立存放，不应平放或堆叠。

2. Cable drums should be stored upright, not laid flat or stacked.

3. 电缆盘不应靠近热源、火源，避免阳光直射。

3. Cable drums should not be near heat sources or fire sources, avoid direct sunlight.

4. 储存期间应定期检查，防止电缆受潮、受损。

4. Regular inspection should be performed during storage to prevent cable moisture and damage.

5. 电缆储存期一般不超过2年，超过储存期应重新检验。

5. Cable storage period generally does not exceed 2 years; re-inspection is required if storage period is exceeded.

J.2 运输要求
J.2 Transportation Requirements

1. 电缆盘运输时应固定牢固，防止滚动、碰撞。

1. Cables should be stored in dry, ventilated, rain-proof warehouse, ambient temperature -10℃~+40℃.

2. 装卸电缆盘时应使用吊车或叉车，严禁直接从高处抛下。

2. Use crane or forklift when loading/unloading cable drums; throwing from height is strictly prohibited.

3. 运输过程中应做好防雨、防潮措施。

3. Rain-proof and moisture-proof measures should be taken during transportation.

4. 电缆盘不应平放运输，避免电缆松散受损。

4. Cable drums should not be transported flat to avoid cable loosening and damage.

5. 短距离滚动电缆盘时，滚动方向应与电缆缠绕方向一致。

5. When rolling cable drums for short distance, rolling direction should be consistent with cable winding direction.

J.3 搬运注意事项
J.3 Handling Precautions

1. 搬运前应检查电缆盘包装是否完好。

1. Check cable drum packaging integrity before handling.

2. 大规格电缆盘应使用专业起重设备搬运。

2. Large-size cable drums should be handled with professional lifting equipment.

3. 搬运过程中应注意保护电缆端头密封，防止进水。

3. Protect cable end seals during handling to prevent water ingress.

4. 电缆盘就位后应及时固定，防止意外滚动。

4. Cable drums should be fixed promptly after placement to prevent accidental rolling.

表J-1 电缆储存环境条件

Table J-1 Cable Storage Environmental Conditions

项目 Item	要求 Requirement	备注 Remarks
环境温度 Ambient Temperature	-10℃ ~ +40℃	避免极端温度 Avoid extreme temperatures
相对湿度 Relative Humidity	≤75%	防止受潮 Prevent moisture
储存方式 Storage Method	电缆盘直立放置 Cable drums upright	禁止平放堆叠 No flat stacking
与热源距离 Distance to Heat Source	≥2m	防止绝缘老化 Prevent insulation aging
通风条件 Ventilation	良好通风 Good ventilation	避免密闭空间 Avoid confined spaces
防晒 Sun Protection	避免阳光直射 Avoid direct sunlight	防止护套老化 Prevent sheath aging

桥架支吊架安装示意图
Cable Tray Support Installation

本表列出铜芯聚氯乙烯绝缘电缆在不同敷设方式和环境温度下的参考载流量，实际应用时应根据具体工况进行修正

Cable tray support and hanger spacing should be determined based on tray specification, load grade and installation method. The following are reference values for maximum spacing of common specifications.

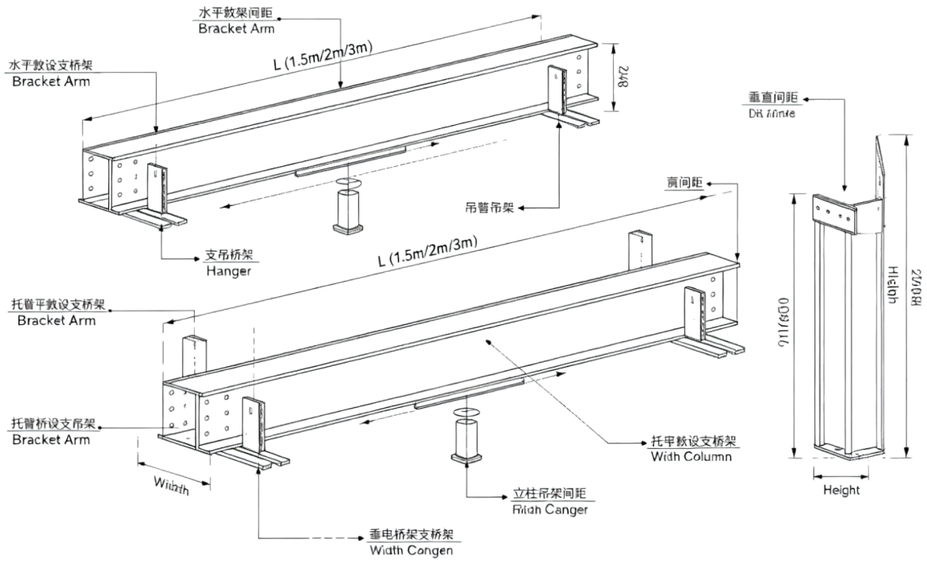

表K-1 水平敷设桥架支吊架最大间距（m）

Table K-1 Maximum Spacing of Supports for Horizontal Cable Trays (m)

桥架宽度 Tray Width (mm)	荷载等级A Load Grade A	荷载等级B Load Grade B	荷载等级C Load Grade C	荷载等级D Load Grade D
≤100	2.0	2.0	1.5	1.5
150~300	2.0	2.0	2.0	1.5
400~500	2.5	2.5	2.0	2.0
600~800	3.0	2.5	2.5	2.0
≥1000	3.0	3.0	2.5	2.5

表K-2 垂直敷设桥架支架最大间距（m）

Table K-2 Maximum Spacing of Supports for Vertical Cable Trays (m)

桥架宽度 Tray Width (mm)	支架间距 Support Spacing (m)	固定方式 Fixing Method
≤200	2.0	卡固/Clamp
300~500	1.5	卡固/Clamp
600~800	1.5	螺栓固定/Bolt
≥1000	1.0	螺栓固定/Bolt

注：1. 支吊架应安装牢固，横平竖直；2. 桥架转弯处、分支处应增设支吊架；3. 大跨距桥架应按设计要求设置支吊架。

Note: 1. Supports and hangers should be firmly installed, horizontal and vertical; 2. Additional supports should be added at turns and branches; 3. Long span trays should be supported according to design requirements.

桥架接地连接示意图
Cable Tray Grounding Connection

金属电缆桥架必须可靠接地，以确保电气安全。以下为桥架接地的技术要求和施工规范

Metal cable trays must be reliably grounded to ensure electrical safety. The following are technical requirements and construction specifications for cable tray grounding.

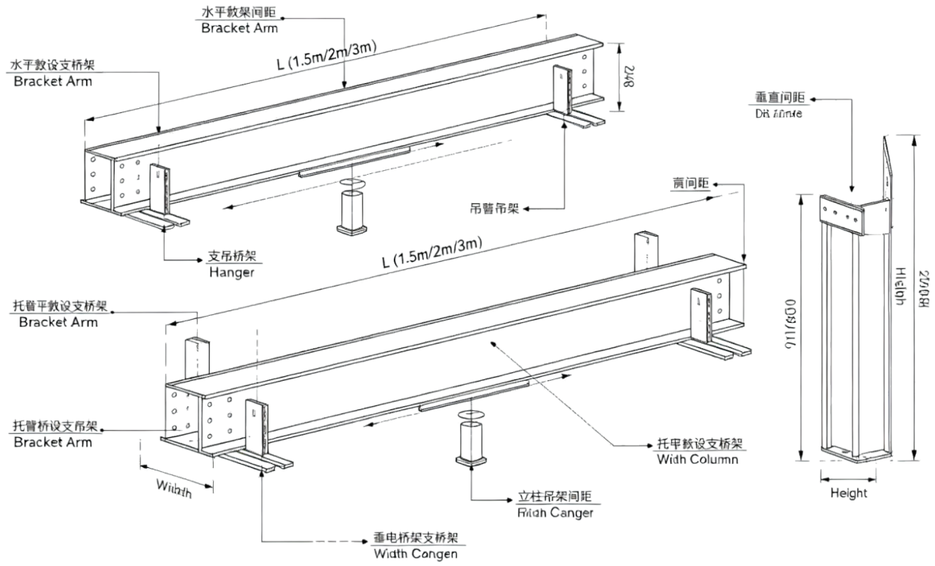

表L-1 桥架接地技术要求

Table L-1 Technical Requirements for Cable Tray Grounding

项目 Item	要求 Requirement	备注 Remarks
接地连续性 Grounding Continuity	桥架之间应做可靠电气连接 Reliable electrical connection between trays	跨接线或连接板 Jumper or connecting plate
跨接线规格 Jumper Size	≥BVR-6mm²（铜芯） ≥BVR-6mm² (copper)	多股软铜线 Stranded flexible copper wire
接地电阻 Grounding Resistance	≤4Ω（一般场所） ≤4Ω (general areas)	特殊场所≤1Ω Special areas ≤1Ω
接地点数量 Grounding Points	全长不少于2处 At least 2 points along full length	两端及中间 Both ends and middle
与接地干线连接 Connection to Main Ground	采用螺栓连接，接触面镀锡 Bolted connection, tin-plated contact	防松垫圈 Lock washer
防腐处理 Anti-corrosion	接地连接处应做防腐处理 Anti-corrosion treatment at grounding joints	镀锌或涂漆 Galvanized or painted

接地施工要求：
Grounding Construction Requirements:

1. 金属桥架系统应具有可靠的电气连接并接地。

1. Metal cable tray system should have reliable electrical connection and grounding.

2. 桥架与桥架之间可采用连接板两端不少于2个有防松螺帽的螺栓连接固定。

2. Cable trays can be connected and fixed with at least 2 bolts with lock nuts at both ends of the connecting plate.

3. 非镀锌桥架之间跨接铜芯接地线，接地线最小允许截面积不小于4mm²。
3. Copper core grounding wire shall be bridged between non-galvanized cable trays, minimum cross-section not less than 4mm².

4. 镀锌桥架之间不跨接地线，但连接板两端不少于2个有防松螺帽的连接螺栓。

4. No grounding wire bridging between galvanized cable trays, but at least 2 bolts with lock nuts at both ends of connecting plate.

桥架安装注意事项示意图
Cable Tray Installation Precautions

电缆桥架安装应符合相关规范要求，以下为安装过程中的关键注意事项

Cable tray installation should comply with relevant specification requirements. The following are key precautions during installation.

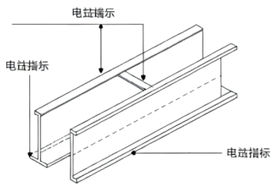

1.桥架弯曲半径要求
Bending Radius

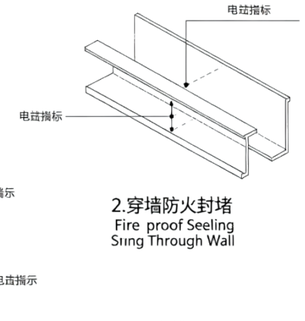

3.桥架与管道间距
Pipeline Clearce

2.穿墙防火封堵
Fire proof Seeling
Sıng Through Wall

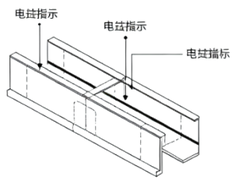

4.桥架层层间距
Layer Spacice

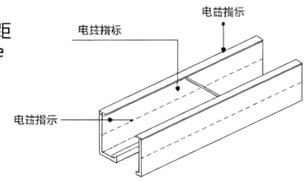

5.桥架盖板安装
Cover Installation

N.1 安装前准备
N.1 Pre-installation Preparation

1. 检查桥架型号、规格、数量是否符合设计要求。

1. Check whether cable tray model, specification and quantity meet design requirements.

2. 检查桥架外观，无变形、损伤、镀锌层脱落等缺陷。

2. Check cable tray appearance, no deformation, damage, zinc layer peeling and other defects.

3. 准备好安装工具和辅材（螺栓、垫片、接地线等）。

3. Prepare installation tools and auxiliary materials (bolts, washers, grounding wires, etc.).

N.2 安装要求
N.2 Installation Requirements

1. 桥架应横平竖直，水平度偏差不超过2mm/m，垂直度偏差不超过3mm/m。

1. Cable tray should be horizontal and vertical, horizontal deviation ≤2mm/m, vertical deviation ≤3mm/m.

2. 桥架转弯处弯曲半径不应小于桥架内电缆最小允许弯曲半径。

2. Bending radius at cable tray turns should not be less than minimum allowable bending radius of cables inside.

3. 桥架与各种管道的最小净距应符合规范要求。

3. Minimum clear distance between cable tray and various pipelines should comply with specification requirements.

4. 桥架穿越墙体、楼板时应预留孔洞，并做防火封堵。

4. When cable tray passes through walls or floors, holes should be reserved and fireproof sealing should be done.

5. 多层桥架层间距离：电力电缆间≥300mm，控制电缆间≥200mm。

5. Multi-layer tray spacing: ≥300mm between power cables, ≥200mm between control cables.

N.3 验收要求
N.3 Acceptance Requirements

1. 桥架安装应牢固，连接螺栓应拧紧，防松装置齐全。

1. Cable tray installation should be firm, connecting bolts tightened, locking devices complete.

2. 接地连接应可靠，接地电阻符合要求。

2. Grounding connection should be reliable, grounding resistance meets requirements.

3. 桥架盖板应齐全，固定牢固。

3. Cable tray covers should be complete and firmly fixed.

4. 提交出厂合格证、安装记录、接地测试报告等资料。

4. Submit factory certificate, installation record, grounding test report and other documents.

母线槽选型与安装示意图
Busway Selection and Installation

母线槽选型应根据负载电流、使用环境、安装方式等因素综合考虑，以下为常用母线槽规格选型参考

Busway selection should comprehensively consider load current, operating environment, installation method and other factors. The following are reference for common busway specifications.

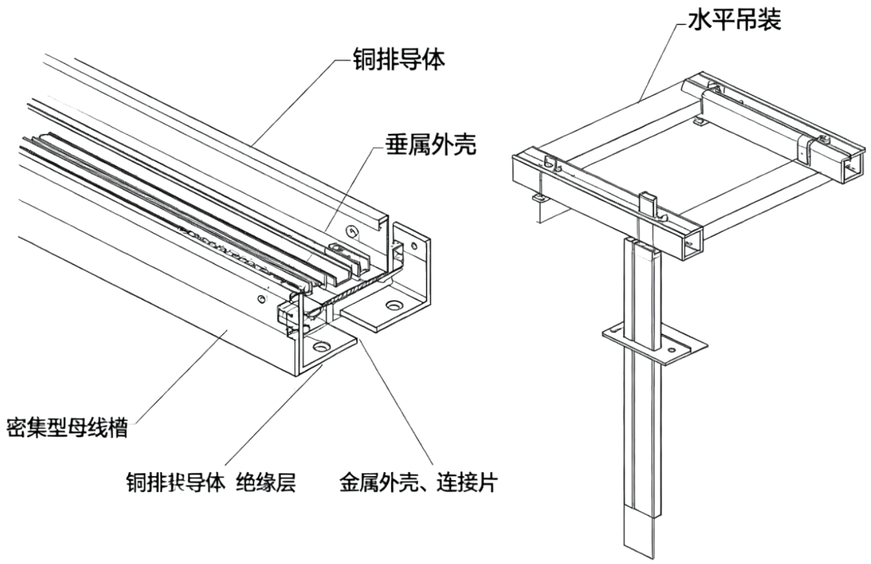

选型要点：额定电流250A-6300A、防护等级IP54-IP66

SELECTION CRITERIA: RATED CURRENT RANGE 250A - 6300A, PROTECTION CLASS IP54 - IP6

表K-1 母线槽规格选型速查表

Table K-1 Busway Specification Quick Selection Table

额定电流 Rated Current (A)	密集型母线槽 Compact Busway	空气型母线槽 Air Insulated Busway	适用场景 Application
250	可选/Available	-	小型配电/ Small distribution
400	可选/Available	可选/Available	一般建筑/ General buildings
630	可选/Available	可选/Available	一般建筑/ General buildings
800	可选/Available	可选/Available	商业建筑/ Commercial buildings
1000	可选/Available	可选/Available	商业建筑/ Commercial buildings
1250	可选/Available	可选/Available	工业厂房/ Industrial plants
1600	可选/Available	可选/Available	工业厂房/ Industrial plants
2000	可选/Available	可选/Available	大型配电/ Large distribution
2500	可选/Available	可选/Available	大型配电/ Large distribution
3150	可选/Available	可选/Available	大型配电/ Large distribution
4000	可选/Available	-	超大型配电/ Extra large
5000	可选/Available	-	超大型配电/ Extra large
6300	可选/Available	-	超大型配电/ Extra large

表D-1 各类电缆最小弯曲半径

Table D-1 Minimum Bending Radius for Various Cables

额定电流 Rated Current (A)	导体截面 Conductor (mm^2)	电压降 Voltage Drop (V/m)	重量 Weight (kg/m)
400	2×(40×5)	0.012	12.5
630	2×(60×5)	0.008	16.8
800	2×(80×5)	0.006	21.5
1000	2×(100×6)	0.005	26.8
1250	2×(125×6)	0.004	32.5
1600	2×(160×6)	0.003	40.2
2000	2×(200×8)	0.0025	52.8
2500	2×(250×8)	0.002	65.5
3150	2×(315×10)	0.0016	82.3

选型原则：1. 按计算电流选择，留1.25倍余量。2. 校验电压降不超过允许值（一般≤5%）。3. 根据使用环境选择防护等级和表面处理方式。4. 消防负荷应选用耐火型母线槽。

Selection Principles:1. Select by calculated current with 1.25x margin.2. Verify voltage drop does not exceed allowable value (generally ≤5%).3. Select protection grade and surface treatment according to operating environment.4. Fire-fighting loads should use fire-resistant busway.

抗震支架安装间距示意图
Seismic Bracket Installation Spacing

建筑机电工程抗震支架的设置间距应根据管线类型、管径、材质等因素确定，以下为常用管线的抗震支架最大间距参考值

The spacing of seismic brackets for building mechanical and electrical engineering should be determined based on pipeline type, diameter, material and other factors.

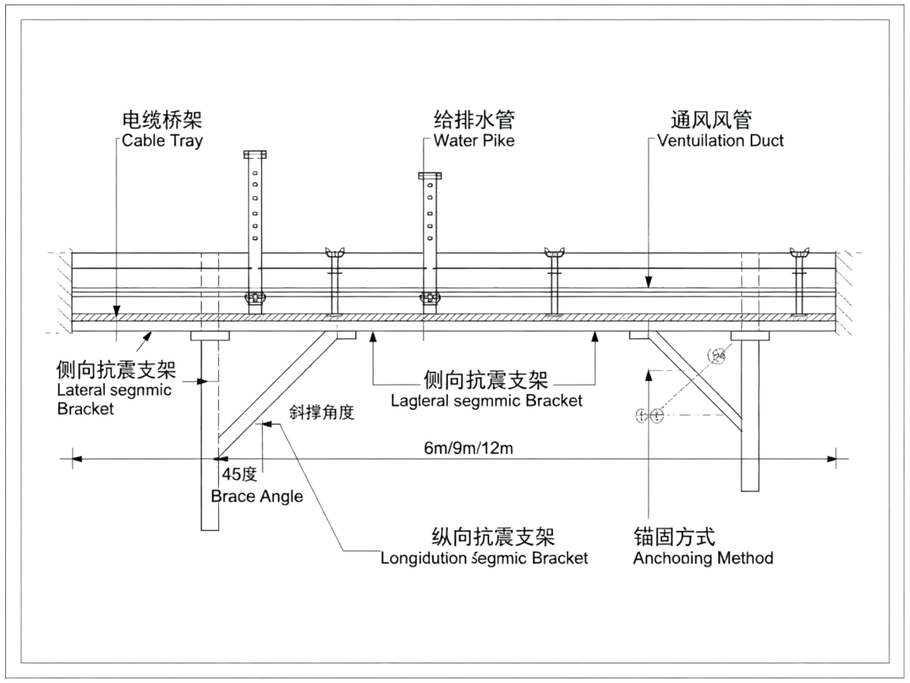

表R-1 抗震支架最大安装间距（m）

Table R-1 Maximum Installation Spacing of Seismic Brackets (m)

管线类型 Pipeline Type	侧向支架间距 Lateral Bracket Spacing	纵向支架间距 Longitudinal Bracket Spacing	备注 Remarks
电缆桥架 Cable Tray	≤12	≤24	矩形截面/ Rectangular
电缆梯架 Cable Ladder	≤12	≤24	矩形截面/ Rectangular
金属线槽 Metal Duct	≤12	≤24	矩形截面/ Rectangular
给排水管 Water Supply & Drainage	≤12	≤24	DN≥65/DN≥65
消防管道 Fire Protection Pipe	≤9	≤18	DN≥65/DN≥65
燃气管道 Gas Pipe	≤6	≤12	所有管径/ All diameters
通风风管 Ventilation Duct	≤9	≤18	矩形截面/ Rectangular
空调水管 AC Water Pipe	≤12	≤24	DN≥65/DN≥65

表R-2 抗震支架技术要求

Table R-2 Technical Requirements for Seismic Brackets

项目 Item	要求 Requirement	备注 Remarks
斜撑角度 Brace Angle	30°~60°（宜45°） 30°~60° (preferably 45°)	保证抗震效果/ Ensure seismic effect
锚固深度 Anchor Depth	≥80mm ≥80mm	混凝土结构/ Concrete structure
抗震连接件 Seismic Connector	专用抗震连接件 Special seismic connector	不得用普通配件/ No ordinary fittings
表面处理 Surface Treatment	热浸锌 Hot dip galvanized	防腐要求/ Anti-corrosion
材质 Material	Q235B及以上 Q235B and above	结构用钢/ Structural steel
荷载安全系数 Load Safety Factor	≥2.5 ≥2.5	抗震验算/ Seismic calculation

安装要求：
Installation Requirements:
1. 抗震支架应与建筑结构可靠连接，不得安装在非结构构件上。
1. Seismic brackets should be reliably connected to building structure, not installed on non-structural components.
2. 管线转弯处、分支处应增设抗震支架。
2. Additional seismic brackets should be added at pipeline turns and branches.
3. 抗震支架安装完成后应进行荷载试验和验收。
3. Load test and acceptance should be performed after seismic bracket installation.
4. 所有紧固件应采用防松措施。
4. All fasteners should use locking measures.

一、荷载等级划分

1. Load Grade Classification

电缆桥架的荷载等级根据其允许均布荷载的大小分为A、B、C、D四个等级，用户可根据实际工程需要选择合适的荷载等级。

The load grade of cable tray is divided into four grades: A, B, C, D according to the allowable uniform load. Users can select the appropriate load grade according to actual engineering needs.

荷载等级 Load Grade	允许均布荷载 (N/m) Allowable Uniform Load	适用场景 Application Scenario	备注 Remarks
A级Grade A	≤500	轻型电缆敷设，如控制电缆、信号线 Light cable laying, e.g. control cables, signal cables	适用于小规格桥架 For small size trays
B级Grade B	500~1000	中型电缆敷设，如动力电缆、控制电缆混合 Medium cable laying, e.g. power & control cables	适用于中等规格桥架 For medium size trays
C级Grade C	1000~2000	重型电缆敷设，如大截面动力电缆Heavy cable laying, e.g. large cross-section power cables	适用于特大规格桥架 For extra large trays
D级Grade D	≥2000	超重型电缆敷设，如多回大截面电缆Extra heavy cable laying, e.g. multiple large cables	适用于特大规格桥架 For extra large trays

二、表面处理说明

2. Surface Treatment Description

表面处理方式 Surface Treatment	涂层/镀层厚度 Coating Thickness	适用环境 Application Environment	使用寿命 Service Life
电镀锌 Electro Galvanized	≥12μm	室内干燥环境 Indoor dry environment	5~10年 5~10 years
热浸锌 Hot Dip Galvanized	≥65μm	室内干燥环境 Indoor dry environment	20年以上 Over 20 years
喷塑 Powder Coated	≥60μm	室内、装饰要求高 Indoor, high decoration	10~15年 10~15 years
阳极氧化 Anodized	≥10μm	高腐蚀、轻量化 High corrosion, lightweight	30年以上 Over 30 years
不锈钢 Stainless Steel	-	强腐蚀、卫生要求高 Strong corrosion, high hygiene	30年以上 Over 30 years

2026

福建日日红电线电缆有限公司

VOLINIX菲律宾分公司

网站：WWW.RRHCABLE.COM

邮箱：RRHCABLE@GMAIL.COM VOLINIX.CABLE@GMAIL.COM

中国总公司地址：中国福建省福州市连江县丹阳镇华园村下溪路64号

菲律宾分公司地址：马尼拉马拉特市罗哈斯大道1680号，拉蒙·马格萨赛中心B座18层

Fujian Ririhong Wire and Cable Co., Ltd.

VOLINIX Philippines Branch

WEBSITE : WWW.RRHCABLE.COM

EMAIL: RRHCABLE@GMAIL.COM VOLINIX.CABLE@GMAIL.COM

Address off Head Office in China: No.64 Xiaxi Road, Huayuan Village, Danyang Town, Lianjiang County, Fuzhou City, Fujian Province, P.R.China

Address of the Philippine Branch: 18th Floor, Tower B, Ramon Magsaysay Center, 1680 Roxas Boulevard, Malate, Manila